MrBaddeley
DOv2 build instructions Pt1

(Draft)

https://www.patreon.com/mrbaddeley

for other parts and instructions

DOv2 Features

- Extremely simplified mechanical assembly / disassembly
- Over 100 improvements to accurate to the Movie version
- Options for Resin Printers for hi rez details
- Huge improvement on drive system using DC motors
- Uses standard RC controller with all trimming supported
- IMU as standard, stable and balanced
- Multiple options for servos, cheap through to higher quality
- Built for quality and budget pricing (£140 for base electronics)
- No flex needed, although options for flex tyres
- Magnetic skins for easy access / battery charging / change
- Full sound system included with all movie sounds available
- Drive unit separate from electronics to allow future modifications (SHADOW for example)
- Open source coding, all sketches published
- Open source fusion files, all fusion files shared to dedicated Patreons

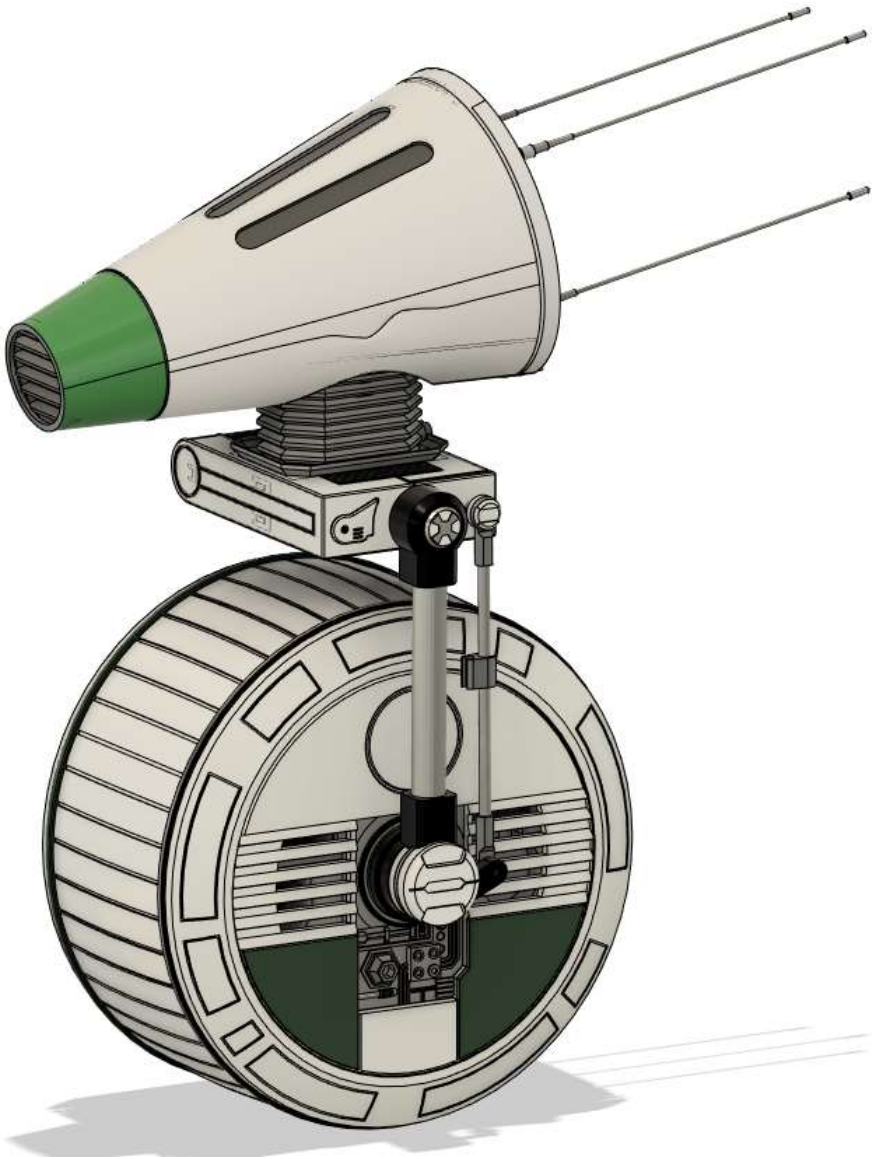

Printing guidelines

Support Needed:

No parts need support

Online Instructions:

https://d-o.dozuki.com/c/D-O_Assembly

All parts are oriented for printing!! No support needed.

Generally all parts should be printed with a .2 layer height as maximum.
On outer facing parts it may be easier to print some on .1 (or use variable settings on the slicer to add higher resolution on gradual slopes etc for easy finishing.)

Lower parts (excluding anything above the main wheel body and the main bar) should be minimum 3 outer walls (1.2mm thick Cura) and 15% infill ** these are a minimum, if you want stronger, I'd go 4 outer walls (1.6mm thick) and 20% infill. On the main bar "L shaped one", I'd recommend 5 outer walls (2.0mm thick) and 25% infill.

For the Head, head plate and nose cone I'd recommend LW-PLA (Lightweight PLA), it will work with standard, but you'll need to upgrade the servo in the headbox to a MG92b or equivalent torque.

The higher parts, 2 walls (.8mm thick) and 15%, try to keep the weight downs where possible. This is for the headbox etc.

Only for information I used Sunlu PETG for all the parts except the larger ones (Drive Edge, Tyre and the outer circle skin), I used SunLu PLA+ for these.

Hardware & electronics

Hardware:
Delrin Plastic ball bearings - 10mm (x 118)
M3 square nut (x53)
M3 nut
M4 square nut (x4)
4mm Flange Motor Coupler H12D10 (x2)
10x5mm rare metal extra strong magnet (x1)
2kg Ballast
M3x35mm countersunk bolts (x3)
M3x 6mm bolt (x4)
Mxx16 bolt
M3x10mm (x27)
Mx25mm bolt (x3)
M3x 12mm bolt (x16)
M3x 8mm Bolt (x23)
M4x8mm bolt (x2)
M4x20mm (x3)

Bearing 683ZZ (x12)
6805-2RS bearing (x2)

5mmx5mm rare metal magnets - cylinder (x4)
10mm x 2.5mm rare metal magnets (x4)
MG92b Servo
4mm brass tubing (.5mm thick)
HS65HB servo (x2)
Servo cabling
Dupont crimping kit
MG996R Servo
Cytron MDD10A Dual Channel controller
3 lengths of 1.5mm rod for the Aerials

The Lazy Susan assembly

Firstly, these are identical EXCEPT the outer skins, which are mirrored. So you can print two sets on one side, or each part but I would recommend printing A & B of the skins. (It doesn't matter only for accuracy).

You need DriveEdge, InnerSusan, OuterSusan & OuterRing (skin), print these.

Firstly, take the Outerring, sand, finish and paint. Also sand the inner face to remove any blips or marks. The Outerring will glue onto the OuterSusan, it should be a snug fit and there's a slight lip which means it can clip into place slightly. Do the same on the Outersusan, being careful to sand any "elephant foot" on the print face. Basically the two parts should fit together to make a flush fit. When you're happy with the fit, use two part epoxy to glue the Outerring to the Outersusan to make a single part.

Next, carefully sand both sides of the bearing race in the lazy susans. This is the half circle groove all around the edge. I'd recommend 400 grit paper and ensure it's silky smooth. I moved onto very fine wire wool, it's worth spending time on this as it can affect the performance later and is probably one of the most critical parts.

Once you're happy with the bearing race you're ready to start the assembly.

The Lazy Susan assembly (cont)

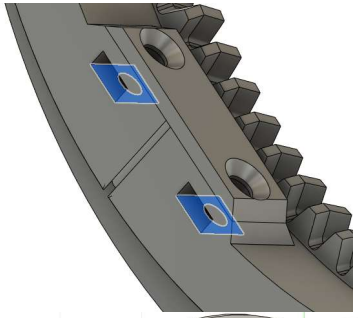

First, take two M3 square nuts and push them into the holes in the inner susan (geared one) as shown in blue. Use a little hot glue to hold them in if not firm.
Take one of the bearings (10mm balls, I used Delrin, you need 58 per side), push this through the bearing hole and make sure it easily goes back and forth. If not, gently file or sand until the ball will go in and out. This is important if you ever need to take the bearings out as otherwise you won't be able to. I then did a thin stream of white grease around the race on the Outer assembly before adding the bearings.

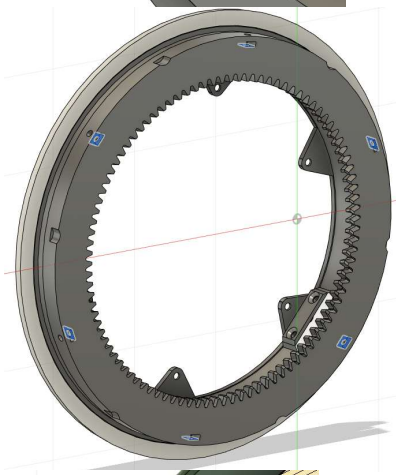

Next, simple keep pushing them in until the lazy susan is full. Around 58 balls are needed. Once full, push the Susanplug into the hole to seal and use two M3x6mm Countersunk bolts to hold this in place. Tighten the bolts and this is your lazy susan. Check for smooth running, at this stage it won't be completely free due to the grease. I used some 3-in-1 oil to loosen it up a little to get a free run.

Next let's fit the drive edge. There's two options, either the standard one, or the one with the flex tyre. If you're using the flex tyre, print both parts and stretch the tyre onto the drive edge (you can enlarge it slightly on the print if you struggle). Be careful, as the flex shouldn't rub on the Outer assembly or tyre, you may have to trim / adjust if this is the case. Once assembled, move onto fitted the drive edge.

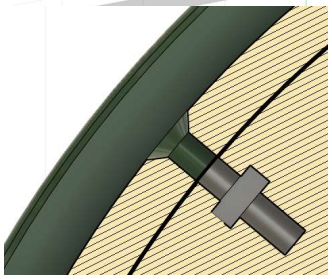

First, clean all the slots around the DriveEdge (these will have bearings in them for the tyres) using a small file. Take 6 x M3 square nuts and push them into the 6 holes shown in blue in the diagram. Again, a little hot glue if they're loose will hold them in place.

Next, slide the drive edge over and fix in place with 6 M3x10mm (or 12mm) countersunk bolts. You can see from the cross section, the hole is fairly deep so will take up to 15mm bolt.

Hardware: M3 square nut (x8), M3x6mm bolt (x2), M3x12mm bolt (x6)

The Lazy Susan assembly (cont)

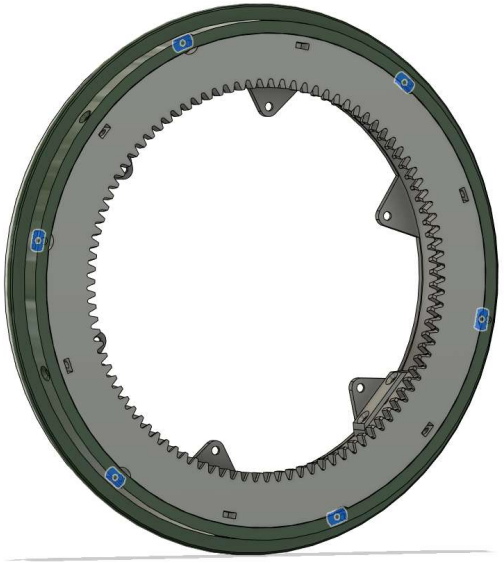

Finally to finish off the Lazy Susans we're going to add the bearings around the edge which the floating tyre runs on.

Take 6 x 683ZZ bearings (3x7x3) for each side. You'll need 6 x M3x8mm Countersunk bolts.

Push a bearing in the slot and screw in the bolt, these self tap into the plastic, don't overtighten them, the bearings should be semi free (it doesn't really matter too much if they're not all free running, they're only used when steering as most of the time both drive edges move together).

Fix all six in place and your Lazy Susan is complete.

Next complete the steps again for the other lazy susan to make both sides.

Hardware: Bearings 683ZZ (x6), M3x8mm Bolt (x6)

The Main Frame assembly

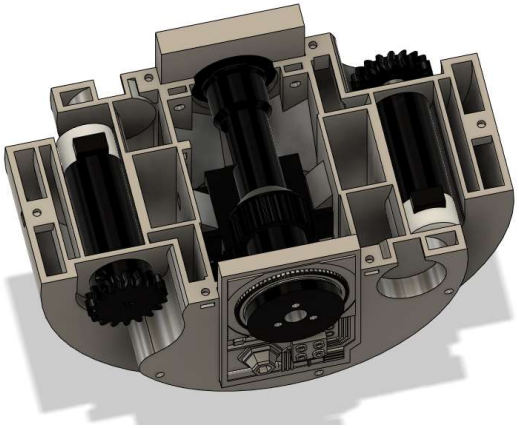

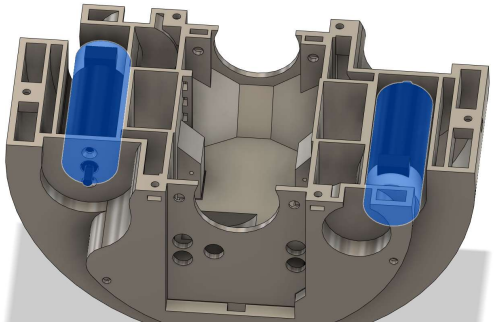

Firstly, take the MainFrame, ServoBase and the MainServoGear.
Push the ServoBase into the MainFrame, it should just slot in easily.
Next take the circular Servohorn which comes with the MG996R servo and using a little two part epoxy, glue the servohorn centrally into the MainServoGear, ensuring no glue obstructs the center hole when it attaches to the Servo.

Then you can fit the MG996 Servo, fit this into the base using the four screws / gromits which come with the Servo. There's holes at the front of the frame to allow a screwdriver in to get the self-tappers tight.

Then, using the Servo bolt provided, attached the MainServoGear to the Servo. This is your main servo in place.

Next we'll fit the Motors, take 2x Pololu 25mm 20.4:1 High power motors (encoder versions are not needed). Fit these into the two motor brackets either side and secure with M3x12mm counter sunk bolts (x2 per motor). Tighten these up, you can use a little locktite if needed, but be very careful not to get it onto any plastic parts!

Hardware: MG996R Servo, M3x12mm (x4)

The Main Frame assembly (cont)

Next the drive gears, there's two options, the "pololu gear updated" or the Pololu gear for the Flange coupler. The Flange Coupler is a stronger / more substantial approach, but the fully printed gear will also work.

If you're using the Flange Coupler, take the coupler (4mm Flange Motor Coupler Option H12D10) and fit the printed gear using M3x8mm (x4 per gear) and M3 square nut (x4 per gear) to bolt the coupler to the gear as shown. This fits onto the motor using the provided 3mm grub screws, again Loctite can be used.

If you're using the printed gears, take M3 x 10mm (x2 per gear) long screws, and M3 square nuts (x2 per gear), fit the captive nut and screw in the bolts either side, again these fit onto the motor shaft with the bolts holding it on tight.

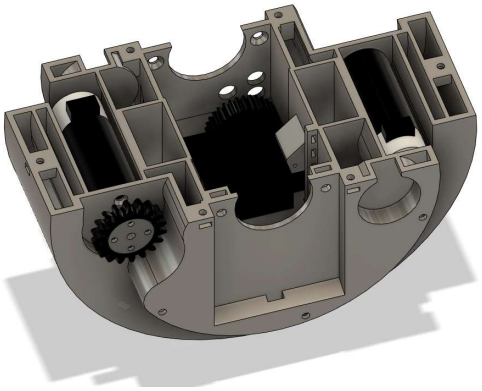

I found the best way of aligning these was to fit them loosely onto the shaft, hold the lazy susans tight against the frame (you'll see the holes where they align) and ensure the front of the gear and the front of the susan gear are perfectly in alignment. Then tighten the grub screws or bolts to hold in place. Make sure these are tight otherwise they can loosen when driving. If you want to use locktite, be very careful none goes on the plastic, it damages / weakens the plastic to the point it's unusable. This is the gears fitted.

Hardware: Option 1: 4mm Flange Motor Coupler H12D10 (x2) M3x8mm (x8), M3 nuts (x8)
Option 2: M3x10mm (x4), M3 square nuts (x4)

The Main Frame assembly (cont)

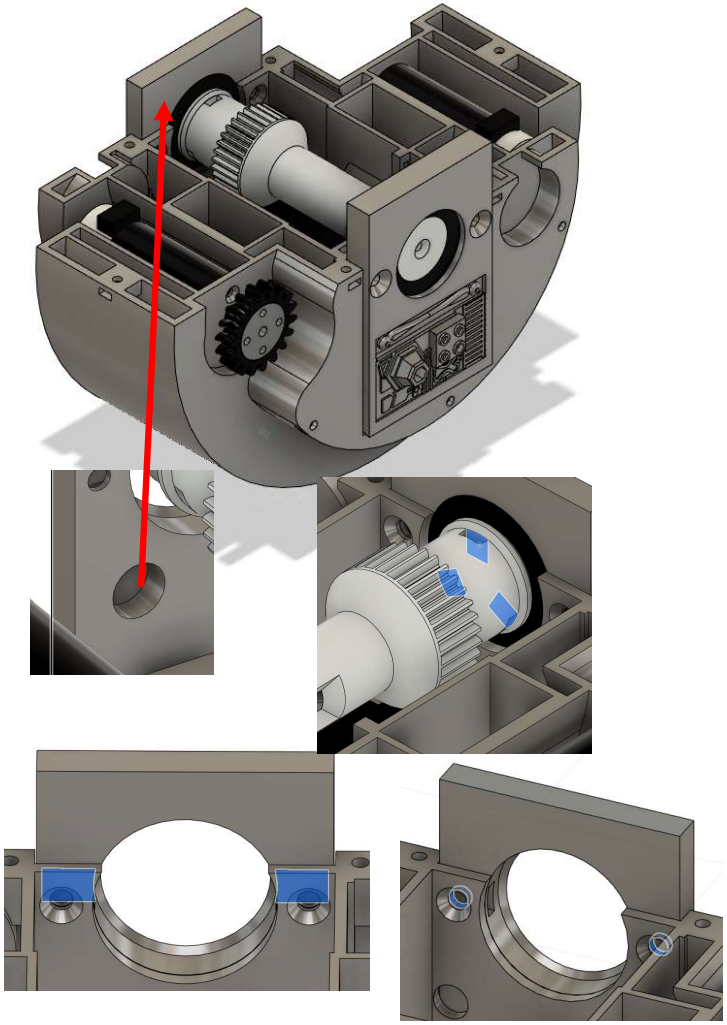

Let's add the mainbar next. Take the mainbar and the front and rear FrameInserts. Note, firstly on the FrameInserts, there's the resin option, if you choose this, print all the resin parts and frames, assemble (I glued mine with 2 part epoxy) and paint / finish these.
On the front Insert, you'll see a 10mm hole recess, this is for a 10x5mm circular Neo-Magnet (extra strong), glue this into the hole using two part epoxy. This give a magnet clip for the cable later and makes taking the head assembly off very easy.

Take the mainbar and add M3 square nuts to the three holes around the edge (shown in blue), hold in place with hotglue as usual.

On the Front Insert, you'll see two slots inside where the bearing goes for M4 Square nuts (x2), fit these into place. Next, take 6805-2RS bearing (x2) and these push into the inserts snugly. Then, take the front insert and place in the frame (same side as the gear) and use M4x 8mm countersunk bolts (x2) to attach the front Insert into the mainframe.

Hardware: 10x5mm rare metal extra strong magnet (x1), M3 square nut (x3), M4 square nut (x2), 6805-2RS bearing (x2) M4x8mm bolt (x2).

The Main Frame assembly (cont)

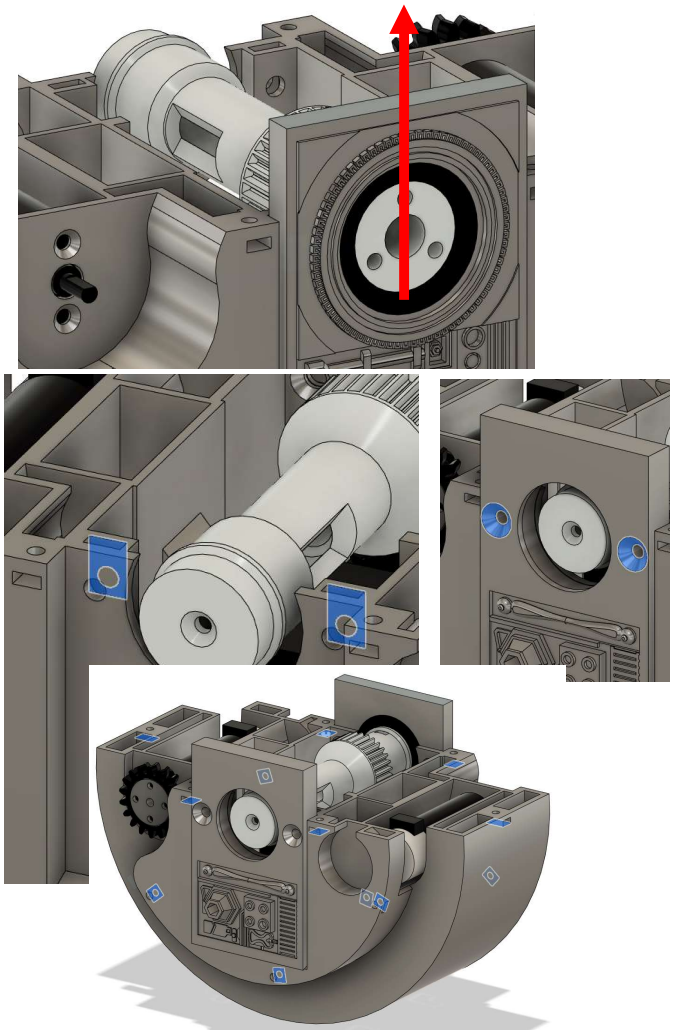

Next we'll add the actual Mainbar. Firstly where you've fitted the servo, connect this servo to a powered servo-tester. We're going to centre this first. (If digital dial to 1500 or just use the centre switch or mode).

Then, with the servo powered and centred, add the MainBar, align it identically to the picture (or as close as you can get it). The cable hole inside goes 90 degrees to the left when viewed from the front and the three holes form a triangle with the top hole pointing directly up. The main bar will be connected to this, so it's important you get this right.

Next, drop two M4 square nuts into the slots for the Rear Insert, again hot glue to keep them in. Finally push the rear bearing onto the rear of the MainBar and bolt the rear insert in place with M4x20mm countersunk bolts (x2). This is your Mainbar fitted correct.

Next fit M3 square nuts (12) to each of the captive nut slots in the frame, making sure each one fits the hole perfectly and hold in place if needed with hot glue again. Three each side on the edges (holes the susans in place) and 6 to hold the top plate in place.

Hardware: M4 square nut (x2), M4x20mm (x2), M3 square nuts (x12)

The Main Frame assembly (cont)

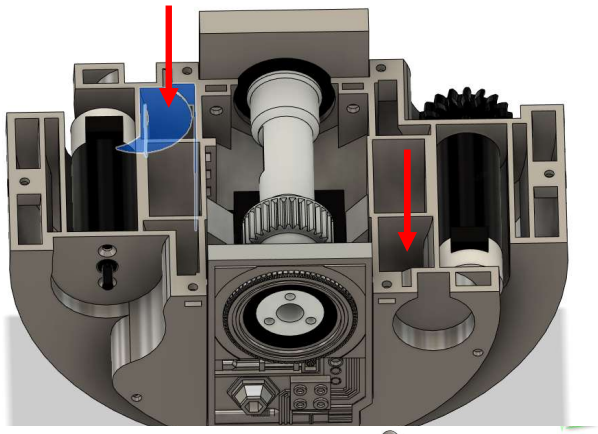

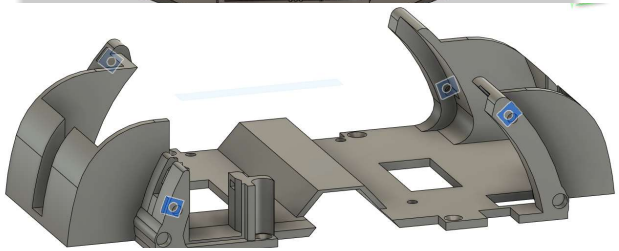

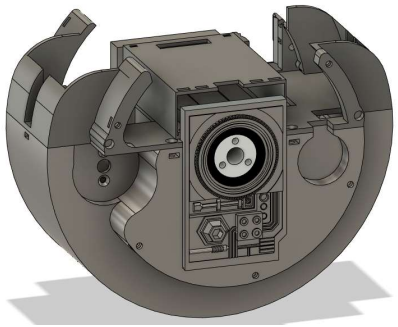

Next add the ballast, you'll need around 2kg of ballast, I used weight used for diving belts but any lead type ballast will do, pour this into the base through one of the holes in the frame. (I used a pouring jug), ensure this only goes inside the base and doesn't do into the battery holes.

Pour all the ballast into the base and shake it a little to level this off in the base. Make sure the base settles to a level position.

Next pack out the space, you can use foam or paper towels, but push these down into all the holes to pack out the space with a screwdriver, keep pushing this in until it's well packed and doesn't move around much.

Next, let's assemble the top frame. First take the top frame and add the 4 M3 Square nuts into the holes as shown (hot glue etc).

Then take the MotorDriveFrame and slot the Cytron Motor Drive board into this (there are plastic pegs which should align with the holes at the bottom of the frame).

Then fit the MotorDriveFrame with the Cytron Motor Drive board installed onto the top of the top frame. Use M3x10mm (x4) to bolt the assembly together. You may need a long screwdriver to hole the plastic board pegs still whilst you tighten up the bolts.
Finally, once assembled, you can bolt this on top of the mainframe using M3x10mm (x6) to complete the frame assembly. Note the gap at the front for the servo cable to come through and the two holes for the motor cables to come through. You will need to remove the topframe again when it comes to cabling / electronics but you can see how it all goes together.

Hardware: 2kg Ballast, packing material, M3 square nut (x4), Cytron MDD10A Dual Channel controller, M3 x 10mm (x10)

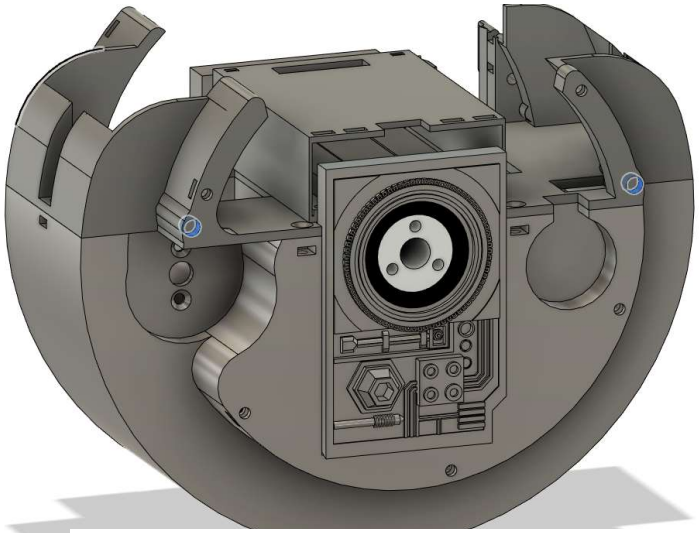

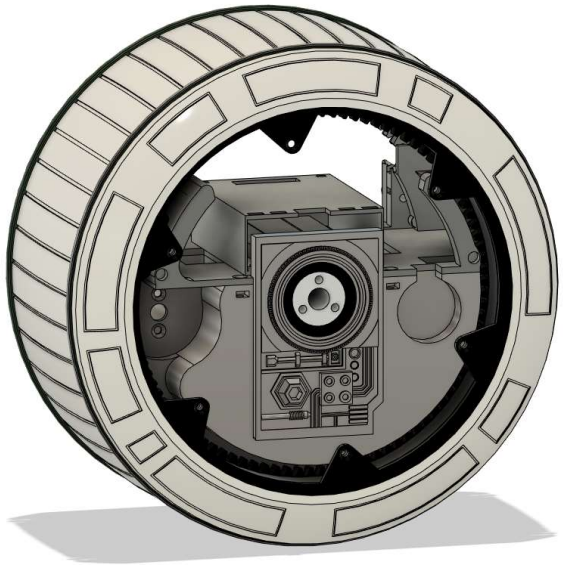

We'll add the magnets for the outer skins now. It's 5mm x 5mm strong cylinder magnets. You'll need 4, two per side.

These glue in the the two holes either side using two part epoxy, so four magnets in total.

Ideally get the same polarity for all the magnets, you'll have to fit the corresponding magnets on the outer panels (these are 10mm x 2.5mm circular plates), I normally use 10mmx5mm for all magnets but space is so tight on DO.

Finally you can assemble the whole wheel mechanism.

Attach one lazy susan on one side with M3x10mm (x6), then fit the tyre which slides onto the 3mm bearings on the susan and attach the other susan in the same vein.

This now gives you pretty much a fully assembled drive wheel. We've still got electronics and wiring to do but the main wheel assembly is complete.

You can assemble the side panels now. They're both the same assembly, take the front panel, paint, finish and glue in the inserts. Complete the same for the rear assembly.

Note on both panels there's two corresponding holes for the magnets (10mm x 2.5mm thick circular), you'll need 4 for the two panels.

Check the polarity is correct (they are attracted to the main frame magnets) and glue them into place with two part epoxy we you did for the frame.

Finally, once the glue is set you can put them into place. The Wheel is complete.

Hardware: 5mmx5mm rare metal magnets - cylinder (x4), 10mm x 2.5mm rare metal magnets (x4), M3x10mm (12)

Assembling the headbox

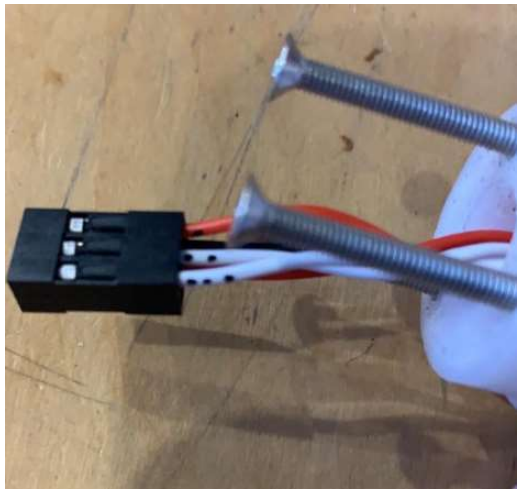

Before we start the headbox, let's talk about how it's connected and the wiring. I think it's important to understand this upfront. You'll need to make some custom DuPont cables and a little soldering but don't be put off.

You can put connectors where you think is appropriate, but I'll share what I've done. For the servos (Head and Main Bar), I've made up a custom loom to make it easier to disassemble and general maintenance.

You'll see on the next page the wiring loom. Where I had to join cables I used shrink insulator to cover the soldering.

I also used DuPont connectors throughout also. The more connectors you have, the easier it is to disassemble.

Apologies for the rather messy diagram on the following page, basically, bring together 5v throughout and gnd throughout, then you're only left with the signal cables, so you'll have six wires coming from the headbox / mainbar servo (5v, gnd and 4 signal cables).

Take your time, plan the cabling and it'll go smoothly.

I also put little dots in the signal cable in the headbox (with the logic that the further you get way, the higher the number. So the headbox servo was 1, The head turn servo was 2 and the side to side motion was 3. I used a permanent marker to drop dots on the signal cable.

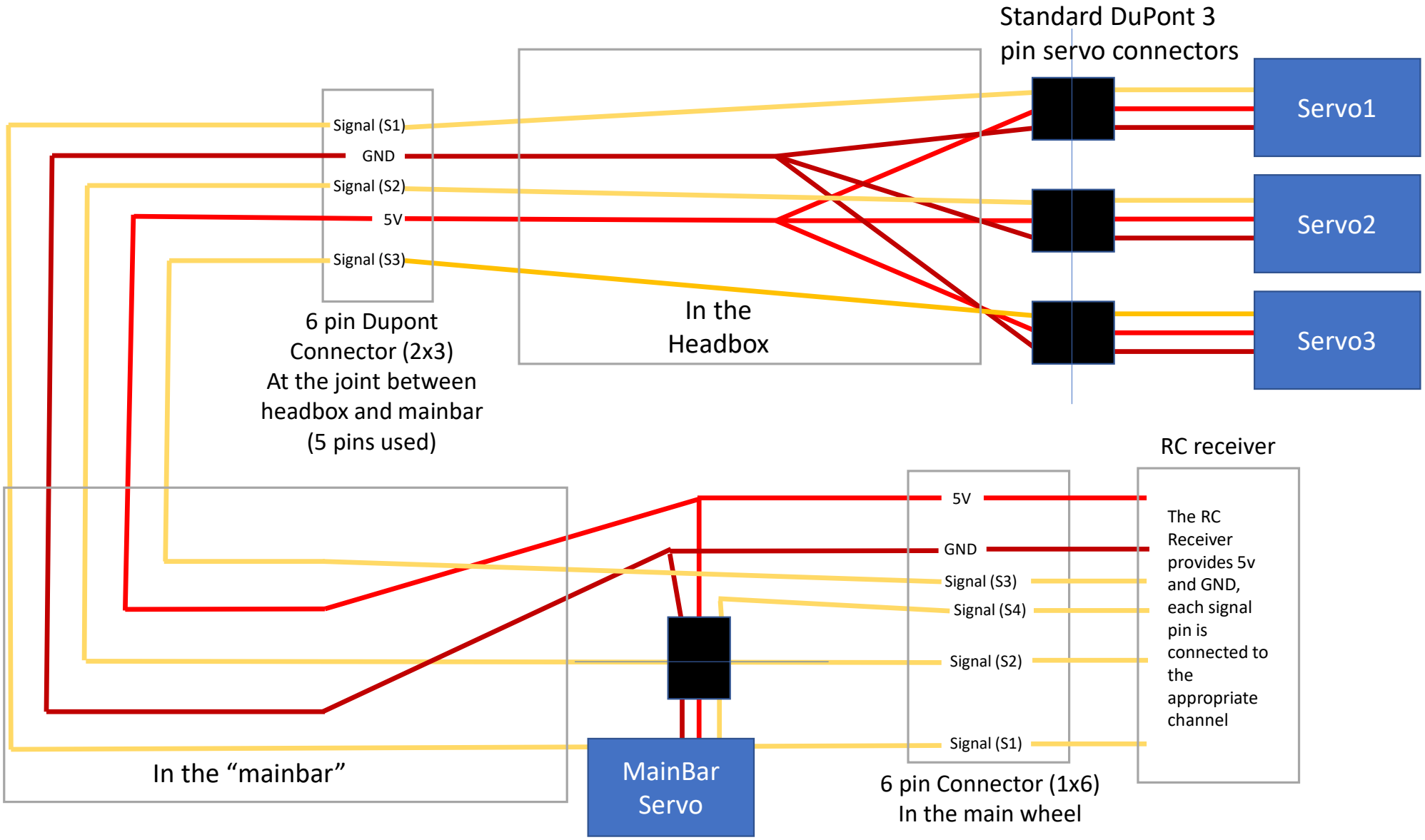
Standard DuPont 3
pin servo connectors
Servo1
Servo2
Servo3
Signal (S1)
GND
Signal (S2)
5V
Signal (S3)
6 pin Dupont
Connector (2x3)
At the joint between
headbox and mainbar
(5 pins used)
In the
Headbox
RC receiver
5V
GND
Signal (S3)
Signal (S4)
Signal (S2)
Signal (S1)
The RC
Receiver
provides 5v
and GND,
each signal
pin is
connected to
the
appropriate
channel
In the "mainbar"
MainBar
Servo
6 pin Connector (1x6)
In the main wheel

Assembling the headbox

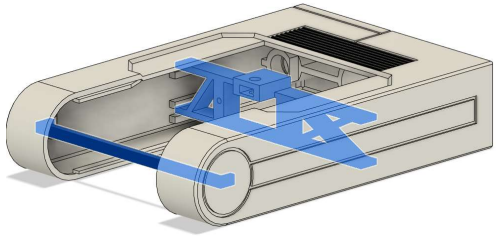

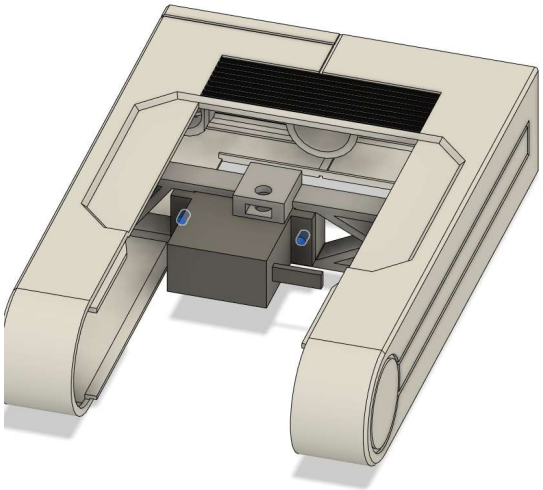

First, let's assemble the headbox. Glue the greeble on and finish / paint firstly. Now there are a few options on Servos depending on cost / performance I've used three types of Servos.
MG90 (these are cheap and 3 can be used on a standard build)
MG92b (more expensive and stronger than the 90s, use **one** only in the headbox)
HS65HB (more expensive, less jitter than the cheaper 90s, use **two** in the Neck)
In my experience, the best performance is one MG92b in the headbox and two HS65HB servos in the neck. Note the print files are slightly different. For the instructions I'll go for the best performance build but there's files for each option.

Firstly take the HeadboxA, Headboxbar and MG90HeadFrame. Add a M3 square nut to the HeadFrame (again securing with hot glue if needed). The bar and the frame clip inside the HeadboxA, check the fit, you may need to sand slightly the bar if it's tight. The bar keeps the two ends solid and stop them moving apart, the frame holds the servo. Once you're happy with the fit, glue in with superglue or two part epoxy.

Then take the servo horn from the MG92b and use two part epoxy to glue this into the MG90Servocouple with the servo connector facing outwards. Once set, you can clip off the protruding arm if you want.

Also add a M3 square nut to the servocouple and use hotglue if it needs securing.

You can then screw the MG92b servo into the frame. It's worth using a servotester to centralise the servo at this point and attach the Servocoupler with the servo screw, the countersunk hole pointing directly upwards.

Hardware: M3 square nut (x2), MG92b Servo

Assembling the headbox

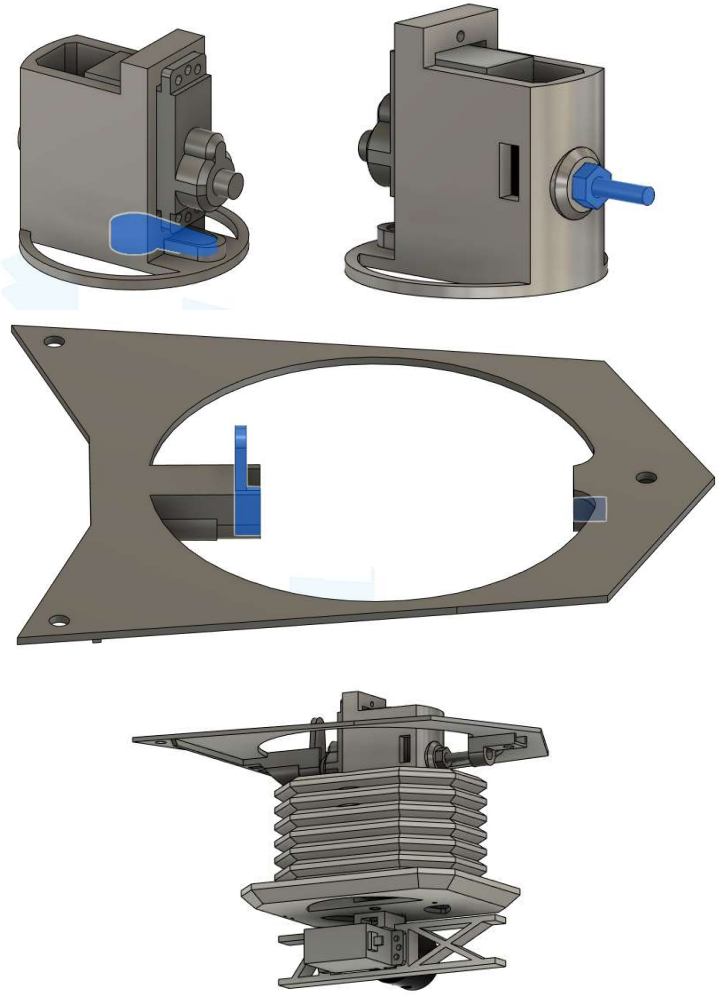

Next, let's assemble get the neck ready, in the first instance you'll just get the components ready and run the cables through, the servos are screwed into place as you do the final assembly.

Take the HS65HBTopNeck and glue the servohorn into place (using two part epoxy) as shown. Then take a M3x20 countersunk bolt and a M3 nut and attach as shown, tighten the bolt to ensure a solid grip.

Next, you'll need the servo horn from the other HS65HB servo and a 5mm length of 4mm brass tubing (.5mm thick), this is used as a bearing insert into the headplate.

Again, two part epoxy, glue the Servohorn in as shown, and a tiny wipe of epoxy on the brass tube before pushing it into the hole, a little sanding or filing may be needed depending on the print. The tubing should fit tightly.

Insert the captive M3 square nut (near the brass tube) into the headplate also, again a little hot glue to hold in place if needed.

Again, feel free to clip the protruding part of the Servo horn off.

The overall assembly is shown, basically you run all the cables through the neck / frame but don't attached the Servos, then bolt the neck in place, then the lower neck servo, then attached the upper neck, use the servo screw to hold this in, then attach the servo into the upper neck. The headplate is fitted to the head and allows the head to be removed easily. We'll cover these off in the next few steps but familiarise yourself with the assembly.

Hardware: HS65HB servos (x2), M3x20 countersunk bolt, Small piece 4mm (.5 thick) brass tubing, M3 nut, M3 square nut

Assembling the headbox

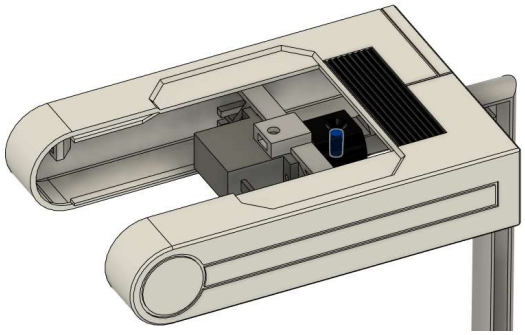

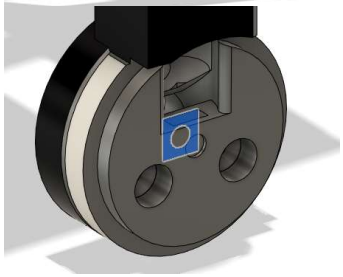

We'll assemble the main bar now, Firstly take the Headbar and slot this into the headbox assembly, secure with a M3x16 (or15) countersunk bolt holding the headbar to the headbox. Next, thread 5 servo type cables through the channel into the headbox. Leave lots of cable either side (headbox and at the lower point where you'll add the connector to the mainbar. (check the earlier notes on the wiring / wiring loom). The cable should pull through and shouldn't be caught on any of the mechanism.

Little bit of a fiddly part, take a M3 square nut and place in the lower part of the mainbar (shown in blue), it slots into the countersunk hole, again you can use a tiny bit of epoxy or hot glue to hold in place, it's fiddly, so watch you don't get any in the thread etc.

Push the cable all the way down the channel and slide over the BarSkin (The barskin is 15mm diameter and 13mm internally, in case you want to try a metal tube cut to length). Note there's a notch at the top.

Next, take the mainbarholderA and this fits onto the end of the bar, thread the cables though the mainbarholder so they go through the large centre hole. Finally take a M3x8 countersunk bolt and bolt the mainbar holder in through the captive nut ensuring it's tightly fixed.

At this stage, you can crimp on a six pin DuPont connector where the mainbarholder attaches to the Mainbar in the body. Again, check the earlier notes on wiring etc for the overview of how it all connects. Note also, I used male connectors on this part. The 6 pin connector fits into the mainbar in the body, enabling a simple method to completely remove the headbox assembly for maintenance.

Next, pop another M3 square nut into the MainBarHolderA as shown and secure if necessary.

Finally we can take the M3x8 countersunk bolt, using two part epoxy glue this into the MainBarCap to make a removable screwable MainBarCap cover.

Hardware: M3x16 bolt, M3x8 bolt (x2), Servo cabling, M3 Square nut (x2), Dupont crimps

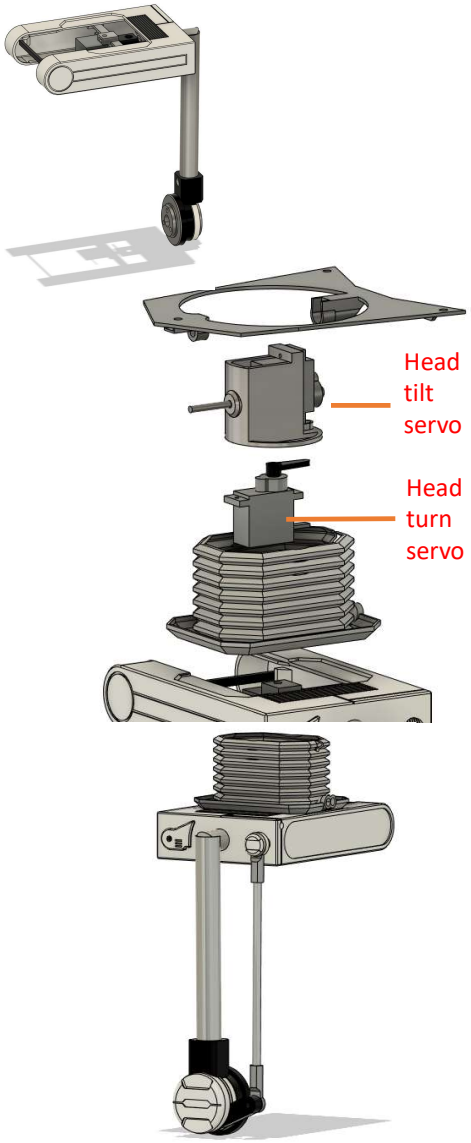

So, we've got to this point. You've attached the main bar to the headbox.

Next, we need to finish the neck and headbox cover. This is a little fiddly, but fairly straight forward.

I made a cable for the three servos, a connector for each, common ground / 5 volts and a signal cable for each as described.

You connect all three servos and ensure cables run through the headboxB hole, the hole in the upper neck. Each servo cable should run through to the main harness, be connected and route through the model. (Hard to describe, but use the pictures to familiarise yourself how it goes together.)

The order of assembly is to secure the HeadBoxB in place, then push the neck into place. Then use a M3x8mm Countersunk bolt to secure the neck. Then you put the Servo for the head turn in place. Use the servo screws to secure. Next, take the topneck assembly, push this onto the head turn servo and secure with the servo screw.

Next, fit the head tilt servo with the two screws provided, ensure the head can turn left and right freely without the cables getting snagged.

No need to fit the head plate at this time, I've shown on the diagram for reference only. (The head plate forms part of the Head assembly).

At this stage, you need to add the nod arm mechanism to have a fully assembled headbox.

This is simply taking Nodbar and NodArmlever, using a M3x10 bolt, attach the two so they move freely. Next, push the NodArmLever over the bar assembly and use the Nodbolt to attach the mech to the head box.

Finally, use the mainbarcap to hold the whole assembly together, screwing into the captive bolt.

Hardware: M3x8mm bolt, M3x10mm bolt

Your headbox / arm should look like this at this point.

You can prepare the topbar now, prepare and paint it black firstly.

There’s a Topbar paint mask in the files, print this and it can be used to mask the black whilst you paint the white centre circle (I just used a rattlecan but airbrush is equally fine).

This then just slides on top of the mainbar (I didn’t secure / glue it, just left it in place so it can be removed for maintenance.

Assembling the head

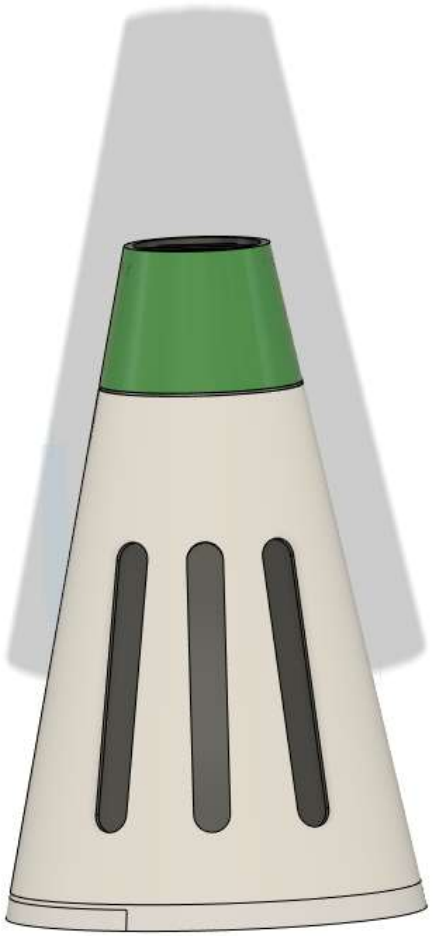

The final part of the puzzle is to build the head.

For this I printed both the head,nose cone and backplate in LW PLA (lightweight PLA), a colorfabb product which is basically a PLA which “foams” at around 250 degrees C. Check the website for settings, but basically you ramp the temp up, bed is standard PLA temp (I use 60C), and turn the flow down to around 1/3, so .333 depending on the slicer. You need to check it works as I know sometimes the printer ignores the flow instructions, so in that case you’ll have to change it in the interface on the printer. Finally I’d recommend turning off retraction, LWPLA is messy to print (stringing etc) but easy to clean up afterwards as the strings literally brush off.

For painting, I’ve tried a few different methods, sealing with PVA and spraying (like foam board) and literally just applying a couple of coats of paint, both worked well. I tend to just sand smoothly first and them apply paint directly now, it works fine (I also do a clear coat as it’s easier when weathering).

First step is to glue the nose to the main cone, for this I mix two part epoxy (rapid set) and spread thinly on a sheet of paper. Next I dipped the end of the cone in it, to give a thin coat on the edge and repeated with the nose.

Then I simply balanced the nose on the cone, ensuring the vents are straight and aligned (with the eyes). I did this by eye, fairly easy to do and has worked in all the domes so far without issues.

Once this is set, the next stage is to fit the headplate and rearframe. (Note everything is super thin, this is critical to keep the weight down in the head).

Assembling the head

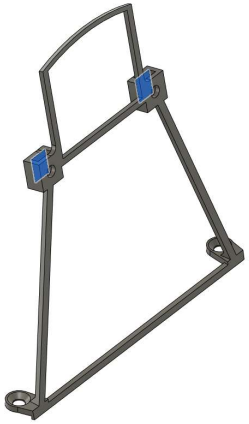

First take two M3 square nuts, slide these into the rear frame and secure if needed with hotglue. The Aerials screw into these to hold the backplate in place.

Next, you fit the headplate into the head, it slips underneath the “inner plate that’s part of the head”, secure this in place with a M3x10 bolt in the far hole, it’s a bit fiddly but make sure it’s tight.

Next, take the rear frame, this fits over the two front holes and the top fits into the inner side of the head dome at the top. Again, I secured with in place at the top with a tiny amount of hot glue. Then take two M3x6mm bolts (test the length, may need 8mm but be careful it doesn’t hit the headskin, and use two m3 nuts and tighten the bolts so the headplate and rearframe are secure. As I said previously, weight is critical so this isn’t as “robust” as the other parts but once assembled it’s fine.

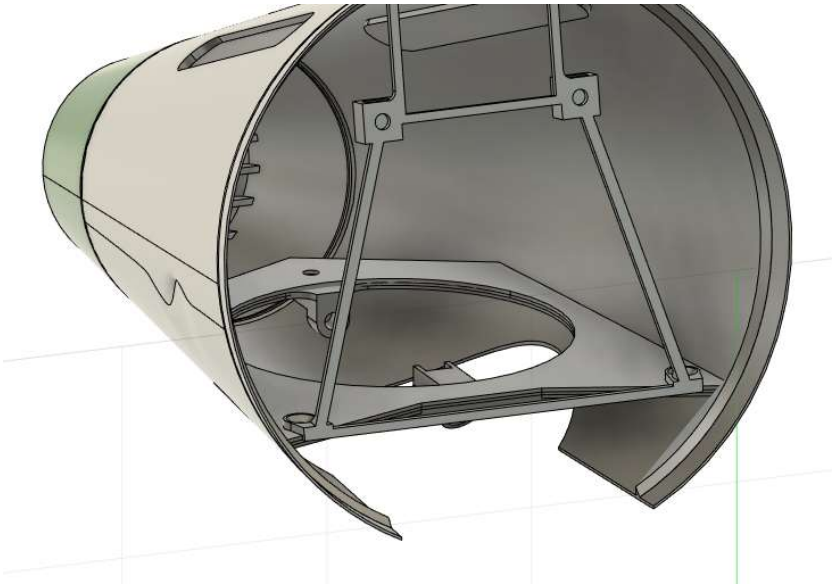

Notes – Attaching the head

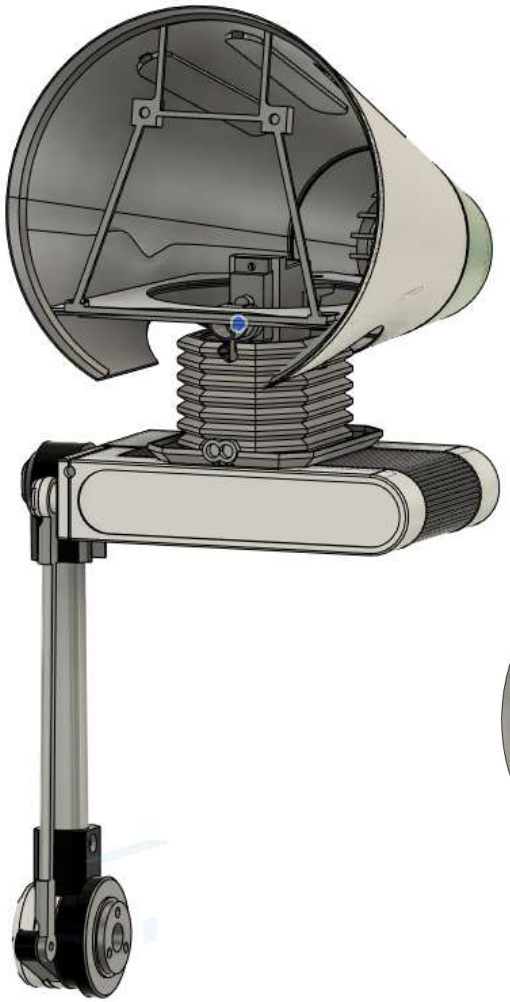

This covers the final head assembly, I would recommend you check this, but ultimately the head will be fitted last once you've assembled the whole model.

Ensure all servos are centred before assembling.

The head (headplate) should then slip into the bolt at the front in the topneck, pull back a little and push this onto the servo, securing in place once you're happy with the servo screw.

This attaches the head, then the rearpanel can be fitted. You'll need to assemble the aerials first, take the printed aerial base, add a long **3mm threaded bar** (I used around 20mm I cut the ends off 3 bolts) which glues into the end of the Aerial and screws into the rear frame. Again, two part epoxy to glue the bolts in. (I did find that resin printed bases the bolt came loose with epoxy, but a drop of superglue on the epoxy made it perfectly strong.). Use 1.5mm flexible steel, piano wire or carbon fibre rods for the body of the aerial, again glued into place and finally use the tips on the end. Two of the Aerials then just go through the holes in the rearpanel and secure it. The final Aerial goes in the lower hole. Again, using the Aerial and a M3 square nut to hold in place with the LowerAerialBracket. This is the head attached. **Hardware M3 square nut, M3 25mm x3 (cut down for the Aerial), 3 lengths of 1.5mm rod.**

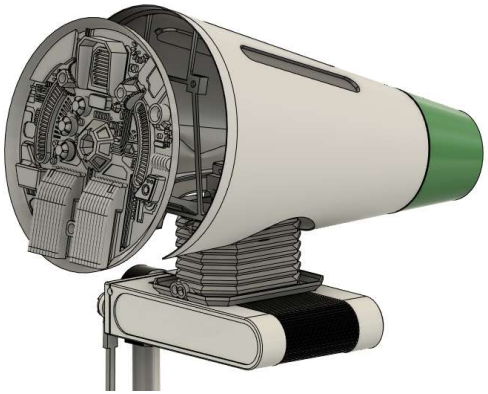

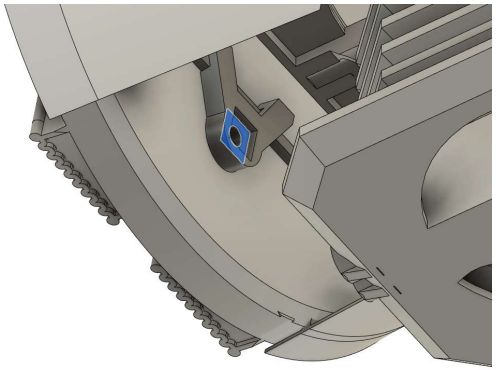

Final physical assembly is just a matter of fitted the outer panels (magnetic), then attaching the headbox assembly (again I used a 6 pin DuPont connector as described to connect the head servos to the body, easy for maintenance and assembly).

Use M3x35mm countersunk bolts to hold the headbox on, then finally screw the cap on.

For the black cables, I used silicon cable (4mm thick I think) and used two part epoxy to glue to the rear of the head box and neck.

To attach the cable to the body, there's a magnet in the panel (circled in red below). I stripped back some of the inner cable and glued a 3mm diameter magnet into the cable, slightly protruding. This magnet then hold the cable but it's easily removed and if snagged, doesn't do any damage.

Hardware M3x35mm countersunk bolts (x3)

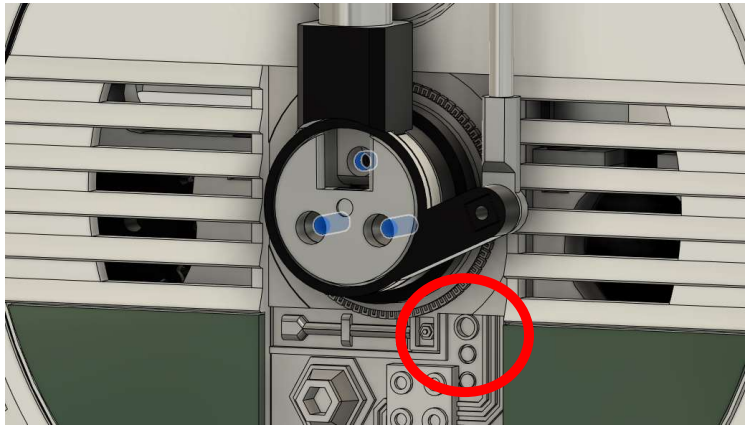

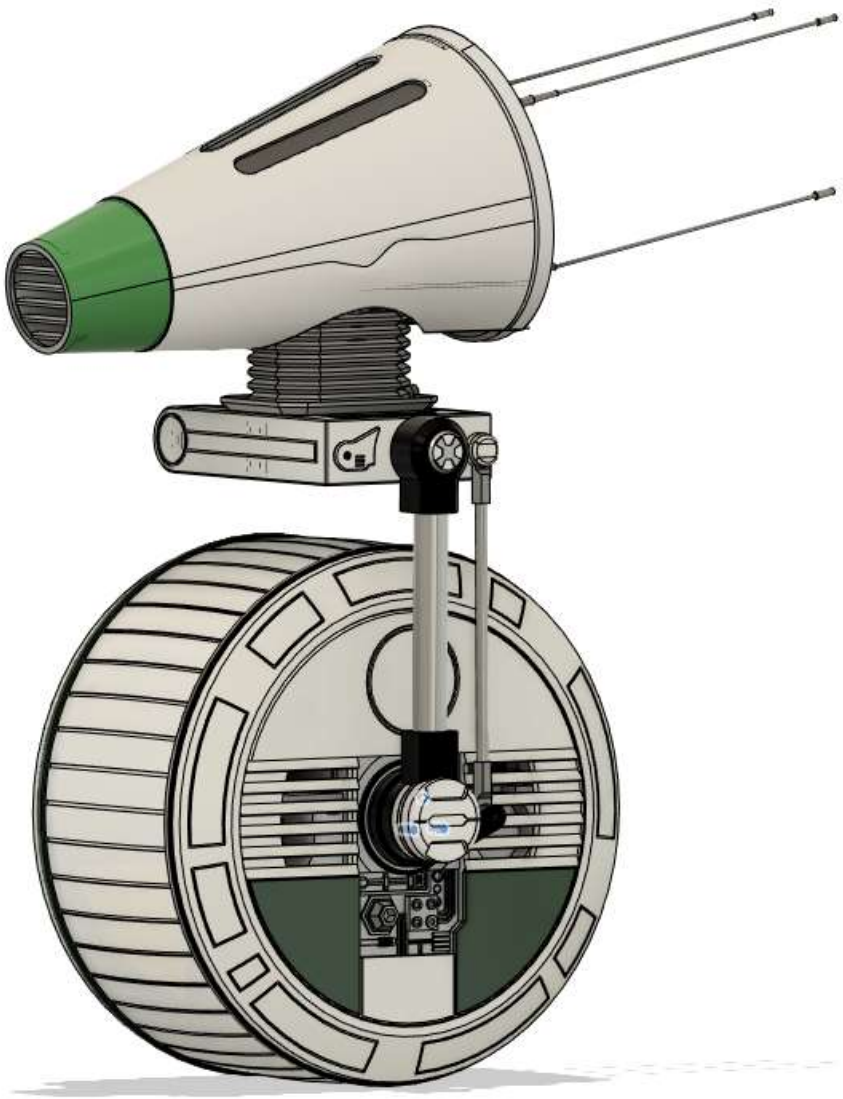

Additional resources and help

There's quite a bit already on the electronics, (see the wiring diagram), I will do some further instructions but there is enough out there now to continue the electronic build / wiring.

Video link for "pre flight" check and overview https://youtu.be/qAdTprXg5C4
This is a quick overview of the electronics and pre-flight checks, I'd highly recommend watching this one.

Using RC with Arduinos https://youtu.be/PPCjme024s0
A little more theory / background on how the RC / Arduino works together, not essential but the more you know, the better fault finding skills you'll have.

Online assembly instructions https://d-o.dozuki.com/c/D-O_Assembly
A brilliant set of assembly instructions by Andy, repeats some of these, but also more depth and photos of wiring etc.

DuPont connector crimping https://youtu.be/b1zfgdByYWs
A quick video on making DuPont connectors, a must have skill really for droid building and well worth investing the time to learn.

DOv2 Wiring Diagram – by Tim Hebel

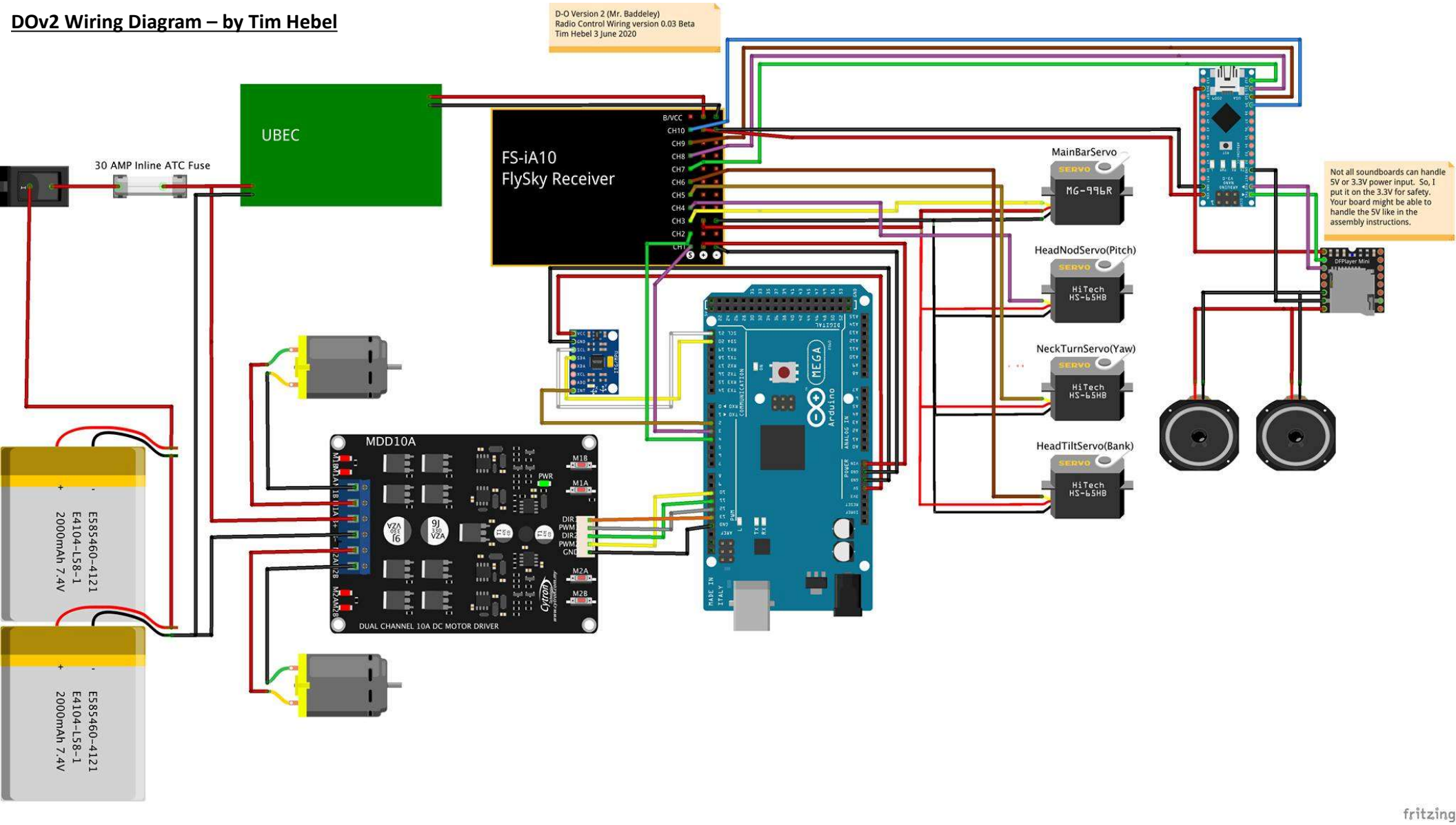

A bit about RC mixing…

Note, from a RC perspective, you'll need the transmitter in tank mode, for the two channels (1,2). Typically this is done either with a setting shown in the instructions, or through mixing.

For mixing, it's normally Channel 1 (drive) as the master and Channel 2 (steer) as the slave, pos mix +100. neg mix +100 combined with a second mix, where Ch2 is the master and Ch1 the slave with -100 for both pos and neg (as shown in the pics, this is for the FlySky i6-x transmitter).

The final tweak is how much / the strength of turning. Initially it'll be a fast spin. You can alter by changing Dual rate / exp, this changes the impact of steering.

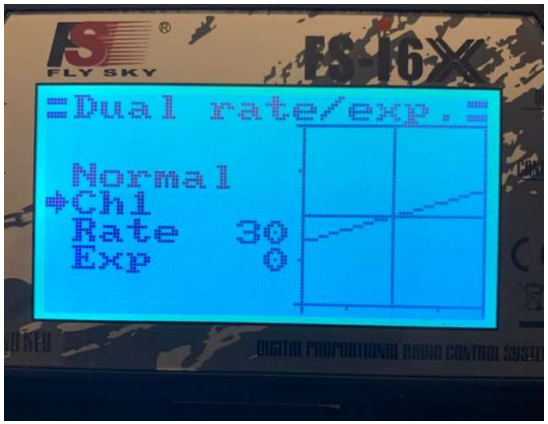

Huge thank you to 3Dutchie, A- G, Adam, Adam Boeglin, Adam Catt, Adam Egginton, Adam Howard, Adam Jansen, adam mantium, Adam Scott, Adrian Colin, afni, Aimee Demuth, Aitor Zorita, Alan Williams, Alejandro, Alex Barszap, Alex Cobb, Alex Hills, Alexander Arvidsson, Alexander Centeno, Alexander Kennedy, Alexandra Bergier, Alexandre Rondeau, Alistair Blake, Allen Watson, Anders Sandstrom, Andre Maas , Andreas SchÃ¤fer, Andreas Selin, Andrew Baker, Andrew Finkelstein , Andrew Mayhugh, Andrew Phillips, Andrew Schwartz, Andrew Whiteley, Andrew Wigg, Andy Foster, Andy Oprisko, angel gutierrez, Anjelica Brady, Anthony Couch, Anthony Harris, Anthony Jukes, Anthony Pizzuto, Anti-Social-Society, ANTONIO, Aren Moffatt, Arif Sethi, Armido Ferretti, Arnaud Jaloin, Arpad Turoczy, Art Faxas, Art Percy, Arthur Molina, Austin, Austin Henley, Autumn, Babak Rezai, Barry Ashcroft, Beaux Bougher, Ben Black, Ben Johnson, Ben Langley, Ben Lewitt, Ben RieÃŸ, Ben Sherwood, Ben W Bell, Benjamin D. Smith, Bernd Pentrop, Bill Morris, BjÃ¶rn Giesler, Bob Bennett, Bobby CC Wong, Boyko Kazakov, Brandon Jaschke, Brandon Peden, brendan bradley, Brennan Carrizales, Brent Williams, Brian, Brian Diaz, Brian Elms, Brian Gelb, Brian Groene, Brian Schelde, Brunelie Lauret, Bruno Espezzano, Bryan Clayton, Bryan Haven, Camilo Jarquin , Carelessranger, Carey Hhh, Carl E Jones, Carl Woods, Carlos Flores, carlos pozo, Carsten Wirtz, Cary Christie, Cerebro, Cesar Covarrubias, Chad Jackson, Chad Regensberg, Charles Everette, Charles Williams, Charles Wright, Charley Letham, ChiefGhost, Chris 'Nova' Claus, Chris Carothers, Chris Duffield, Chris Herringshaw, Chris Hunt, Chris Lee, Chris Lewis, Chris Miller, Chris Ondrovic, chris pinter, Chris S, Chris Stroud, Chris Welder, Christian Ramsvik, Christina cato, Christina Cato, Christoffer SchrÃ¸der, Christophe CUEFF, Christophe Kormann, Christopher C Booberg, Christopher Grey, Christopher Herb, Christopher VanDyke, Chsen, Chuck Arrivas, CK Liao, Clement Muchiti, Codezombie, Cody Maier, colin arber, Colin Nolan, COLT GRAHAM, Contrivit, Corey Allen, Corey Harris, Corey Shuman, Courtney Greene, COUTERON, Craig Humphreys, Craig oakeshott, Craig Young, Crim Arcades, Csanadi Zoltan, Dalton Pruitt, damon reed, Dan, Dan Allen, Dan C Johnson, Dane G, Dani Rose, Daniel, Daniel, Daniel C, Daniel Drake, Daniel Kocian, Daniel Montero, Danny Bijlsma, Darren Ink, Darren McDaniel, Darren Serool, Darth Auteur, Dave Donohue, Dave Kennedy, Dave Stapley, David Becker, David Dahl, David den Boer, David Elder - Darkmoon Creatures, David Goodfellow, David Hagstrom, David Hooie, David Horn, David Hughes, David Keay, David Kinlaw, David Mohney, David Price, David Scott, David Tyra, David Wise, dawn_kitsune, Dead Bothans, Dean, Dennis Bouffard, Dennis Hazelwood, Derek Gorsuch, Derek's Workshop, Deryck Beard, diyquad, DM Jim -- The Tabletop Engineer, Doko Theo, Dominic Marco, Dorian Gray, Doug Inman, Doug Wilson, Douglas Olson, Douglas Souza, Draco1986, Duke Duel, Dylan Panarra, Ech03, Ed Johnson, Ed Kraus, Eddie Nielsen, Eduardo Alves, Elly Madrigal, Emily Whitehouse, Eric Beeks, Eric Boyer, Eric C Douglass, Eric Hanson, Eric Ho, Eric Kana, Eric M Gore, Erick Main, esther rimington, Evan Muschinske, Everett Brooks, Fabian Hediger, Felix, Felix Tao, Fernando Sosa, Fidel Aaron, Filippo Dispenza, Florian LEVY, Fran, Francesco Pelosi, Franziska Sauer, Frederic Annet, Freya, Gage McIvor, Gareth Becker, Gary King, Gary Smith, Geoffro / Hex3D, Georg Schibranji, George Ford, Gilles White, Glenn David, Glynn Turner, Greg, Greg Fowler, Greg MacAusland, Greg Oetker, Greg Tracy, Guillaume Jasmin, Gyorgy Banyar, Hai Pham, Hajuskin, Harold Harmon, Hennequez Frederic, Henry Ford, Hiromichi Yoshida, Horst Krohn, Hugo Barois, Ian Jennings , Ian Klask, Ian Whitehouse, iceowl, Isaac Miller, Ivan Hartley, Ivan Klas, Jacob Edwards, Jadon Flores, Jahosefat, Jake Boone, Jake Danible, Jakob Frabosilio, James, James, James Fender, James Hodson, james kerby, james kvavle, James lawick, James Mahaffey, James McHugh, James Newman, James Thompson, James VanDusen, James Woodward, Jamie Wilson, Jason, Jason Ball, Jason Black, Jason Bogue, Jason Engebos, Jason Scott, Javier Chung, Jay, Jay Davis, Jean Tournier, Jef Lepine, Jeff Barnes, Jeff Brockway, Jeff Johnson, Jeffrey Glass, Jeffrey McLamb, Jeffrey Peters, Jens Larsson, Jeremy Howard , jericho63, Jerry Brown , Jerry Petrey, Jesse Barker, Jessica Elder, Jim, Jim Huffman, Jim McCann, Jim Mihal, Jody Reimers, Joe Bolli, Joe Forsythe, Joe Kenney, Joe Kieft, Joe Malone, Joe Pfab, Joel, Joel Griffin Dodd, Joey Amorosino, Johan Nauwelaertz de AgÃ©, JOHN BELINDA, JOHN CARPENTER, John Durbin, John Fry, John Gowan, John Harris, John Lafferty, John Morse, John Mortimer, John Peters, John Porra, John Springer, Johsi, Jon Haag, Jon Lambert, Jon Luckett, Jon Weger, Jona Smith, Jonas HÃ¶pfner, jonathan king, Jonathan Nelson, Jonathan Olsson, Jonathan Plasted, Jonathan Smith, Jonielson Silva de AraÃºjo, Jordan Kinnett, Jorge Villarreal, Jorick Melgers, Joroko, Jose Medina, Jose Miguel Benito Martin, Jose Rodriguez, Joseph Govocek, Joseph Masci, Joseph Powell, Josh Ward, Josh Wren, Joshua Bowlin, Joshua Cockrum, Josiah Muncy, Julian Sergeant, Julien Boyer, julien saunier, JÃ¸rgen Ryeng Antonsen, K Weese, Kai Duncan, KAKNAS GEORGIOS, Katharine Horace, Kelly Luck, Ken Jones, Kenneth, Kenneth Dahl Pedersen, Kenneth Frydenlund, Kenny Elliott, Kevin Kittle, Kevin O'Leary, Kevin Volo, Kevin Watters, King Phil, Kirsten English, korkai, Krakx, Kristopher Climie, Kurt Knopp, Larry, LarryJ, Lars Lindberg, Laurent Devendeville, Lee, Lee Cassar, Lee Gray, Lee Murray, Lee Pearson, Leo Edinger, Leon de Graaff, Lisa Charlton, Lloyd Tillman, Loco Mags, Lord Hotwing, LordGarth6, lorncampbell, Luc Cannivy, Luis Rodriguez, Luke Iovenitti, Luke Killam, Lynn, M Kleis, Make it out of Wood, Malcon Akitan, Manuel Ferro Jr, Manuel Roman Camacho, Marc AVON, Marc Fischer, Marc Frank, Marco Randazzo, Marcus David Kraus, Marcy, Mardu's costumes & props, mario kempster, mark coombes, Mark Leigh, Mark Oram, Mark S Tadgell, mark sampson, Markus Glomb, Martin, Martin Beveridge, Martin Blanco, Martin Conway, Martin Corner, Martin Drake, Martin Laycock, Martin Rourke, Mat, Matt Campbell, Matt Evans, Matt Garboski, Matt Keller, Matt Long, Matt Moram, Matt Pohl, Matthew Collins, Matthew Hopkins, Matthew Leech, Matthew Morley, Matthew Pawlik, Matthew Ramdass, Matthias, Matthias Poschner, Mauro Santini, Max Burchett-Zuniga, Mel Harris, Michael, Michael, Michael Bleck, Michael Elbrecht, Michael Friedrich, Michael Gamboa Brenes, Michael Lennon, Michael Montelongo, Michael Moser, Michael Stowell, Michael Waltemathe, Michael Woods, Michal Miszta, Michel Deramaix, MichelFibs, MickaÃ«l Laporte, Mike Garvey, Mike Grant, Mike Hirsch, Mike Johnson, Mike Stewart, Mike Wilson, Mimir Reynisson, MIRALLES, Mister Machode, Moody's Ozarks Traveler, Morpheus, Mr Pheer, Mr.HelpfulAsian, Nabih Saikaly, Natalie Greco, Nate Hoffman, Nathan Loding, Nathan Pratt, NAVARRO StÃ©phane, Nic Jones, Nicole Moyle, NixonFiles, Norbert Andreas Richartz, Nova C Crawford, Olivier LabbÃ©, Omar, Orpheus1103, Oscar Madrid, Palmer Reale, Patrick Coajou, Patrick Coyne , Patrick Ryan, Patrick Vrancken, Paul, Paul Carter, Paul Carter, Paul giovannucci, Paul Godden, Paul Mandell, Paul May, Paul Moloney, Paul Murphy, Paul Smith, Paul Stre, Paul Yanzick, Pavol ProchÃ¡zka, PD Foster, Pedge, Penelope Blake, Peter Richards, Peter Thompson, Phil Carper, Phil Hallard, Phil Taylor, Philipp, Phillip Proctor, Phillip Williams, Pierre-Alain Ney, Porscifant Art, Quincy Dinh, Quinton Currier, R.n De jong, Rafael Alejandro, Ramey Chanadet, Raul Raygoza, Ray Edgley, RegorSonOfGor, Reinhard Stockinger, Revilo Blok, Rhon Manlapaz, Richard Blackburn, Richard Cross, Richard Cuesta, Richard E Gambler III, Richard H McPherson, Richard Schark, Richard Wilde, Rick Ahrendt, Rick Hanson, Rick Sitte, Rickey Askew, rickg_la, Rob Bathgate, Rob Dinniwell, Rob Dinniwell, Rob Fife, Rob Saey, Rob Wallis, Robbie Stewart, Robert Accurso, Robert Brooks, ROBERT C LIBBY, Robert D White, Robert Daubar, Robert Gusek, Robert Harlan, Robert McCown, Robert Moeller, Robert Pfandler, Robert Powell, Robert Redden, Robert Ripple, Robert Sacca, Robert Simmons, Robert Van Meter, Roberto Suarez Calzada, Rodrigo Iloro, Roger Carruthers, Romil01, Ron Mulderig, Ronald Alix, RONALD MOOREHEAD, Ronny hilton, ross hobbins, Rubin Polizzi, RubÃ©n, Rudolph Bescherer Jr, RuKira, Rune Steenstrup, saben leinbaugh, Sam Morton, Sam Neth, Sam Prentice, Santeri Jukarainen, Scot Allison, Scott Callahan, Scott Chavez , Scott Davis, Scott Dicus, Scott Hansen, Scott Wheelis, Scott Will, Sean Brockwell , Sean Lavigne, Seth Phillips, ShadyP, Shane Barnbrook, Shane Dzicek, Shannon VanDyke, Shawn Collier, Shawn Steele, Shayne Aspaas, Sherri Leyden, Shonda Treadwell, Simon Graver, Simon Reason, Simon Ruel, Smoulder, Soniyx, Sparda Sorokhan, Steele Smith, Stefan Mager, Stefan Moncher, Stephane Beaulieu, Stephane Fugere, Stephen Gradek, stephen hakimipour, Stephen Hoiles, Stephen Schmidt, Steve Hull, steve niuttall, Steve Thurston, Steven Bernitz, Steven Jackson, Steven Lacey, Steven Lawrence, Steven Schultz, Stuart Champiny, Stuart Winstanley, Svee, Sven Van Heerden, TamÃ¡s Pukler, Tarak Sillini, Tavares Ford, Tero KÃ¤rkkÃ¤inen, Terrill Staton, Terry Dossey, Terry Pham, The Bell-Horwaths, The Dragon's Rest, The dROBot, The Green Spartan, Theo Deyle, Theodore Konetski, TheSnowwraith ., Thilo Hauke, Thomas Bechert, Thomas Campbell, Thomas Ladds, Thomas LeBlanc, Thomas Powers, Thomas Yankee, Tim, Tim, Tim, Tim Bolt, Tim Goldenburg, Tim Largent, Tim Ringley, Tim Willson, Timothy Baginski, Timothy Bennett, Timothy Campbell, Timothy Greer, Timothy Hebel, TK3062, Toby Sabol, Todd Roesner, Todd Walden, Tom Stenbraaten, Tomasz Cholewinski, tony antonelli, tony ferguson, Tony Healey, Travis Carney, Travis Hamilton, Trevor Zaharichuk, Trina Legary, Tristan Gore, Troll and Error, Troy Rogers, TubbyTusken, Ty Pepin, Tyler, Val Glessner, Vernon Gilmore, Vincent Palma, Waldo Minny, Walter Codesido, Walter Martinez, Warren, Wayne Allen, Wayne Kennedy , Wayne Vyner, Wayward Perspective, wes thierry, William, William, William Bowles, William Hockenberry, William J Steele, William Traynham, William Turner, YCSWYD, Zach Tyke, Zara Doskocilova, ZED Defense, Zman & Ágor Bonadio,