MrBaddeley
BD-1 build instructions
Part 1
(Draft)

https://www.patreon.com/mrbaddeley

for other parts and instructions

BD-1 Features

- Much quicker print than R2 ☺
- Simple, static build
- Extremely animated, ten servos
- Stands, Body Rocks, Neck, Head 360 type movement
- Animated Eyes, Holoprojector and twitching ears
- Cute!!!!
- Iris eye action
- Cheap & simple electronics
- Auto and “Puppet” mode
- Full head puppet controller
- Compatible with most small beds
- Parts orientated for printing

Printing guidelines

<u>Support Needed:</u>

FrontFrame

RearRedEye

HeadFrame

Neck

All parts are oriented for printing!! No support needed except those listed.

Generally all parts should be printed with a .2 layer height as maximum.
On outer facing parts it may be easier to print some on .1 (or use variable settings on the slicer to add higher resolution on gradual slopes etc for easy finishing.)

Legs, 4 or 5 outer layers, 20 – 30% infill, legs do need to be as strong as possible, including the base.

For head layers and upper parts weight is at a premium, so may reduce to 2 outer layers and 4 base / top layers. (Lighter body, head and neck reduces the strain on the legs).

Keep body, neck and head prints, focus on weight reduction, 2 outer layers.

No flexible printing needed, but flex filament is used in it’s raw format for servo arms etc.

Hardware & electronics

M4x5 Countersunk bolt (x2),
M4x10 Countersunk bolt (x3)
M4x15 Countersunk bolt (x3),
M4x25 Countersunk bolt (x4)
M4x30 Countersunk hex bolt (x2)
M3x5 Countersunk bolt (x6)
M3x8 Countersunk bolt
M3x15 Countersunk bolt (x3)
M3x20 Countersunk bolt (x4)
M3x22 Countersunk bolt (x2)
M3x35 countersunk bolt
M3 nut (x8)
M3 square nut (x4)
M4 nut (x7)
M4 square nut (x6),
GT2 6mm Timing Belt, 2mm Pitch (couple of metres)
4mm brass tubing (.5 thickness)
MG996 Servo
MG90 (x8), MG92b (x2)
Servo cable
Flexible Filament
5mm Blue LED, 5mm Yellow LED, Servo Cable, DuPont crimping set
6904-2RS Bearing – 20mmx37mmx9mm (x4)

Electronics list

- Ardunio Mega
- Battery (I used a 7.4v 2200mah Lipo, Floureon, but any will work)
- Adafruit 16 channel, 12 bit servo controller
- UBEC (any UBEC, I had a switched one, I used 10 amp but smaller will do, converts 7.4v to 5v for logic)
- DfPlayer Mini sound card
- Micro SD for the sound files
- Amplifier (I used TPA3116D2 Dual Channel amp 2x50 w)
- 1k resistor (for the DF player Mini)
- Speakers (2x 2inch (52mm) speakers to match amp)
- 6 x 10k Metal potentiometers
- 4 x 5mm microswitches
- Cabling
- Dupont Crimping set

The Lower Legs…

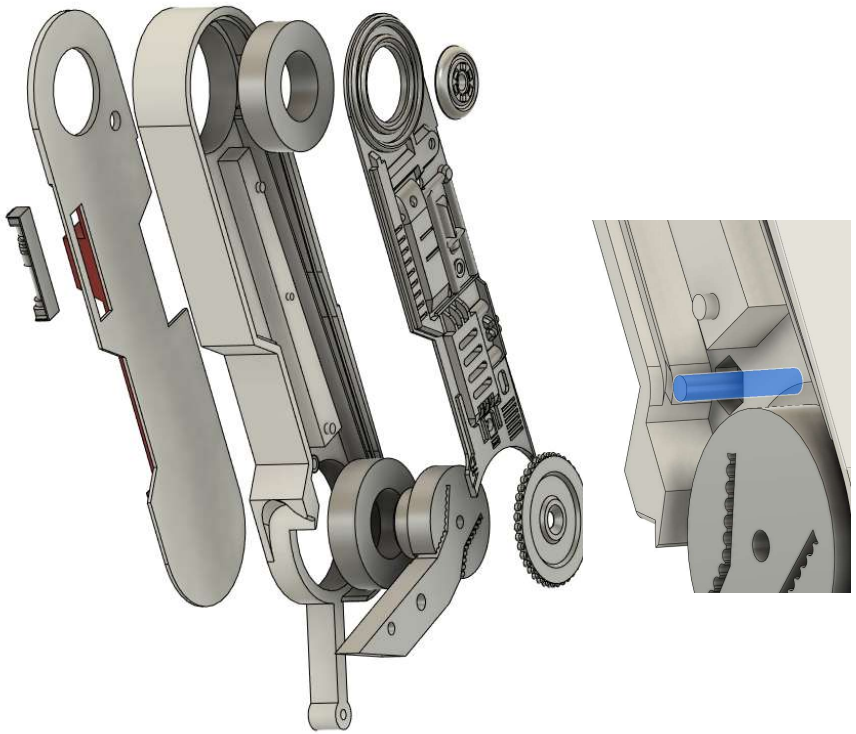

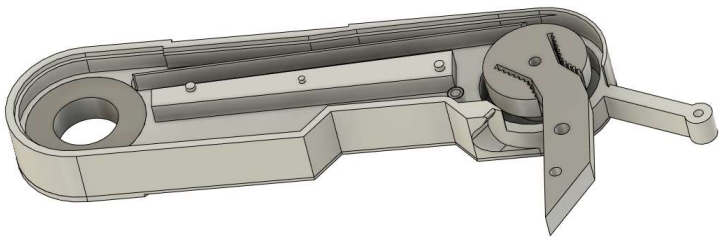

Start with the lower legs, print all the parts ready to assemble. You'll also need the "FullSpindle" print from the base folder.

Firstly take a M3x15 countersunk bolt and nut (blue) and strongly tighten this into the lower leg frame sticking out into the inner frame, them glue the LowerLegSkin to the LowerLegFrame (use the appropriate glue for your filament, typically I use two part epoxy.
Once the glue has set, I'd recommend sanding and painting all the visible parts, the red booster cover can be easily masked as can the silver details on the leg.

Next, add glue the lower greeble in place completing the lower leg frame. Two bearings (6904-2RS) are fitted to the legs, these are extremely tight (and should be) as these are friction fitted. If it's too tight, gentle sanding can ease the fit, but not too loose otherwise the legs will be wobbly. I use another bearing on top and gently tap into place.

Next the Full Spindle is fitted into the lower bearing as shown on the diagram, note the slots are for 6mm toothed belt (the type used in 3d printers), we'll fit this once the upper leg is assembled also.

At this stage, leave the LowerLegPlate and the two covers off the model. So your assembly should look something like the picture, repeat for the other leg.

Hardware: 6904-2RS Bearing (x2 per leg), M3x15 and nut (per leg)

The Upper Legs…

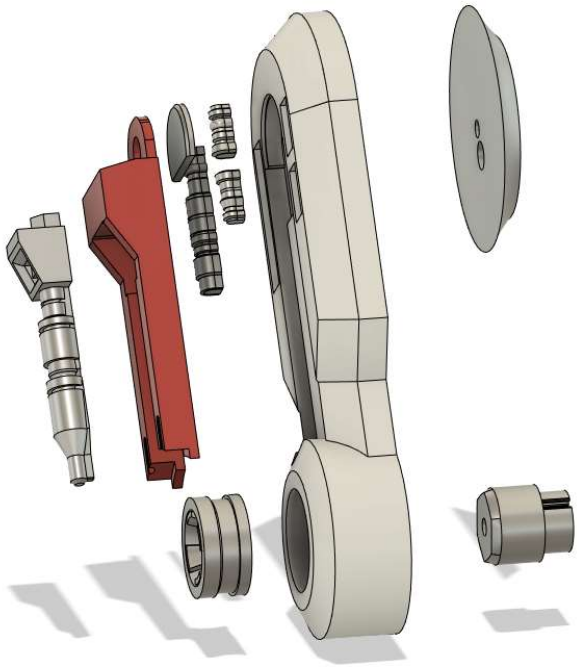

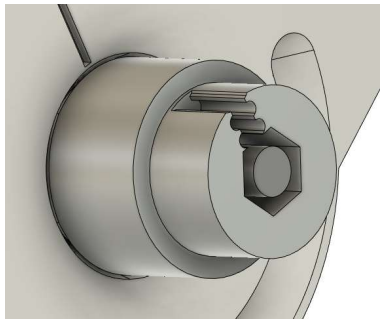

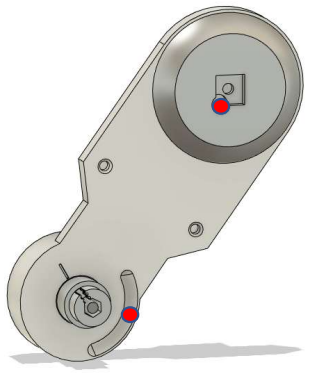

Next print all the parts for the upper leg ready to assemble.

Again, sand and paint all the visible parts, note the upper leg has no masking required, so each should be painted a block colour.

Note the hole / groove which runs through the upper leg, this is for two servo style cables to run power and data to the head. Each leg will take a 3 core servo style cable from the base to the head giving 6 wires. We'll cover this in the electronic section.

Next fit the LegPulley to the main leg, this is done with a M4x30 Countersunk hex bolt and M4 nut, note the bolt should pretty much come level with the LegPulley, this is important when fitting the toothed belt.

At this point, cut a good length of Servo Cable and thread through the groove / hole in the leg with a good length either side as this will run into the head and into, and out of the base to the Arduino / power. One end goes through the elongated slot near the lower leg, and the other goes through the hole into the shoulder / body (marked in red).

Next, the Greebles can be glued in place, the PistonArm fitted and the Booster cover over the top. At this point, leave the CentreHubUpper, Hub and CentreHub off the model. Repeat for the other leg.

Hardware: M4x30 countersunk hex bolt and nut (per leg)

Assembling the legs…

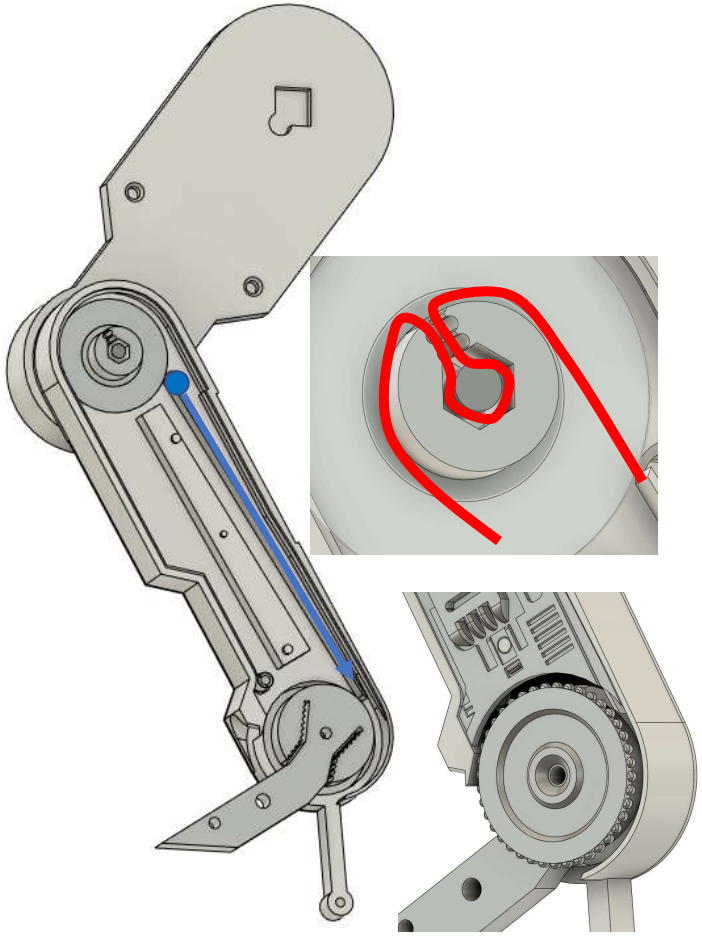

The legs fit together, with the pulley going through the upper bearing.

Take the upper leg, feed the cable through the hole at the top of the lower leg (blue), route the cable down the channel and push the pulley through the bearing. I have intentionally made this a tight fit, so again, a little sanding if you can't get it in, but you want a tight fit. Push the leg in so the leg moves smoothly and doesn't catch, but still has very little / no gap between the two.

This is the assembled leg, next we need to fit the timing belt to complete the leg animation mechanism. This is using GT2 6mm Timing Belt, 2mm pitch, typically used for 3d printers and widely available (I used ebay).

This runs from the lower hub, around the upperpulley as shown in leg (red), and back down to the lower hub.

You want the leg virtually straight at one extreme (as the lower FullSpindle touches the lower leg) and bend at the other extreme. You also want the toothed cable to be fairly tight, looped over the fixed bolt in the lower leg (I cut a small piece of 4mm (6mm length Brass tube to put over the fixed bolt as a "bearing").

Assemble both legs and ensure the mechanism is "in synch" with both legs moving in parallel, adjusting the toothbelt as needed.

When you're happy with the toothed belt positioning, sync and tensioning, mix some two part epoxy glue and put a small amount on both the ends and the middle loop to ensure a really secure and fixed fit.

Next, fit the hubcover using a 5mm M4 countersunk bolt, which "self taps" into the plastic and holds the cable in place. You can use epoxy the hold the cable in place, but I didn't need to.
Finally the main cover can be put in place, it clips on, but a little hot glue can hold it (you may need to remove to access / repair / maintenance).

Hardware: GT2 6mm Timing Belt, 2mm Pitch (cut to length), M4x5 Countersunk bolt (per leg), 4mm brass tubing (6mm long).

The Base…

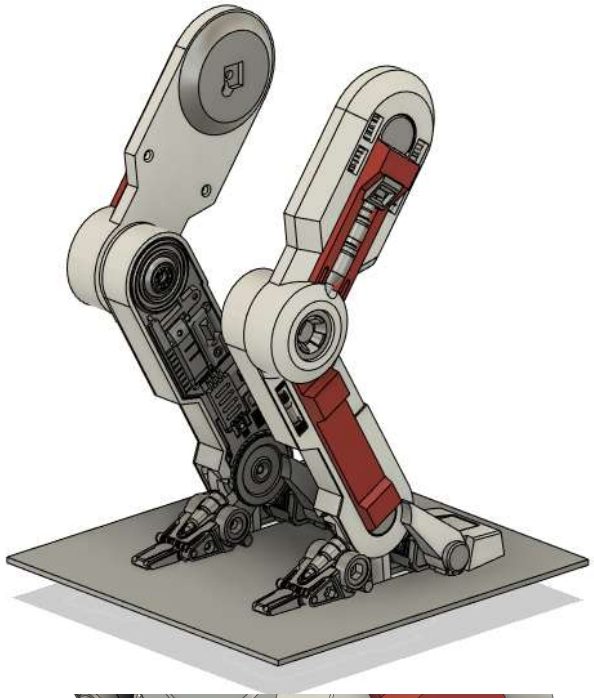

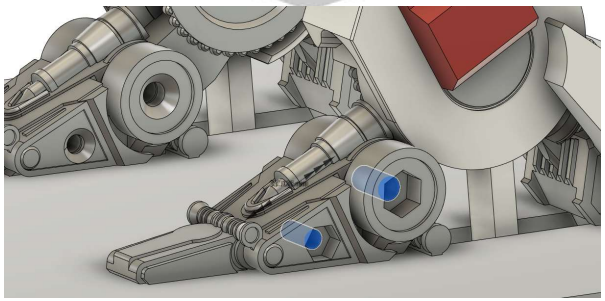

Next, print out the base.

Firstly, paint the base. This does take some masking, paint the base colour, then the white and finally the silver.

The legs simply slot into the base, threading the cables through the holes.

The legs should move smoothly, when pulling the levers underneath, they should move up in sync. They can then be fixed to the base with bolts.

Take M4x25 Countsunk hex bolt and M4 nut, fit this into the hole nearest the legs and tighten.

Next take M3x22 Countersunk hex bolt (you can use M3x25) and a M3 nut, fit these into the farthest hole and tighten.

This is the legs and base assembled. The next step is to attach the body.

In preparation for the body, print out the main body folder.

Hardware: M4x25 Hex Countersunk Bolt & M4 nut (x2) M3x22 Hex Countersunk Bolt & M3 nut (x2)

The Body….

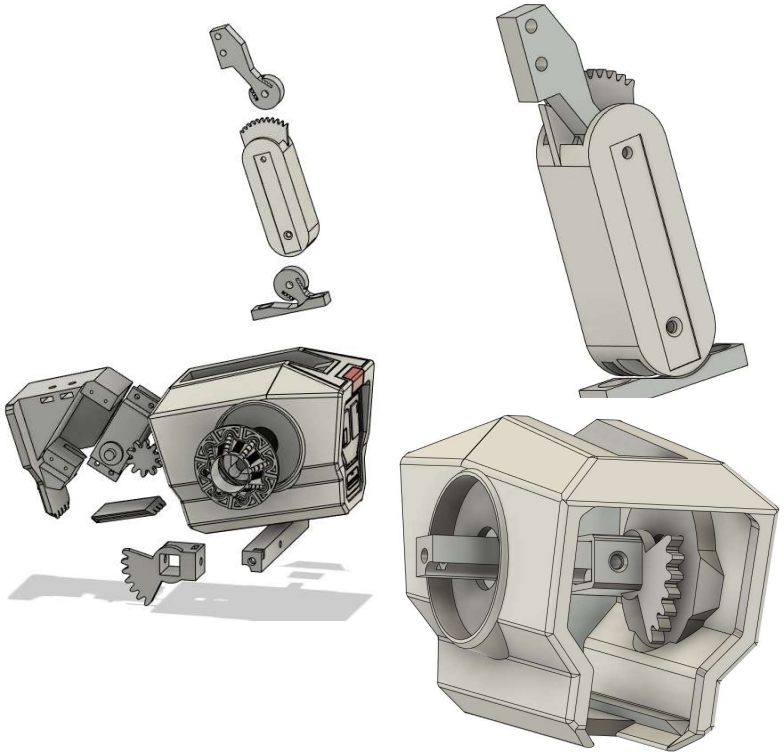

We're going to start the body with the neck mechanism first. Print all the body files out and you'll need the HeadFrameB print also from the MainHeadMech folder. (as before, sand / paint all external surfaces before assembly).

Take the Neck, HeadFrameB and LowerNeckHinge parts. Cut two lengths of toothed belt, **42 teeth** long (as shown).
Next, put one belt either side in the slots, creating a "loop" which will keep the head level. Basically this is slotted into the neck and held in place with two bolts in the upper and lower holes. Once you're happy with the fit and tension, apply a little 2 part epoxy glue to hold the belts in place solidly.

Cut two pieces of 4mm brass tubing (8mm long) and insert into the HeadFrameB and LowerNeckHinge holes (a little epoxy glue can hold these in place), these are effectively bearings for the 3mm bolts. One set, push the assembly into the neck slot.

Now you can assemble the neck, take a M3x15 Countersunk hex bolt, and screw this into the lower hole so it goes through the brass tube. Then pull the HeadFrameB to apply tension and line the hole up, then take a M3x35 Countersunk hex bolt and screw this temporarily into the upper hole (the will be removed later for the head mechanism but keep it there at the moment).

Next, take the tiltgear and MainBodyBar and the main body. Take an M4 square nut and drop into the slot in the Bar (holding in place with a bit of hot glue), hold the tiltgear in the body and slot the bar through the shoulder holes, through the tilt bar and line up the hole. Fix in place with a M4x25 Countersunk bolt.

Hardware: 4mm Brass tubing (8mm x2), 2 x toothed belt (42 teeth long), M3x15 countersunk bolt, M3x35 countersunk bolt, M4x25 bolt, M4 square nut

The Body.. continued

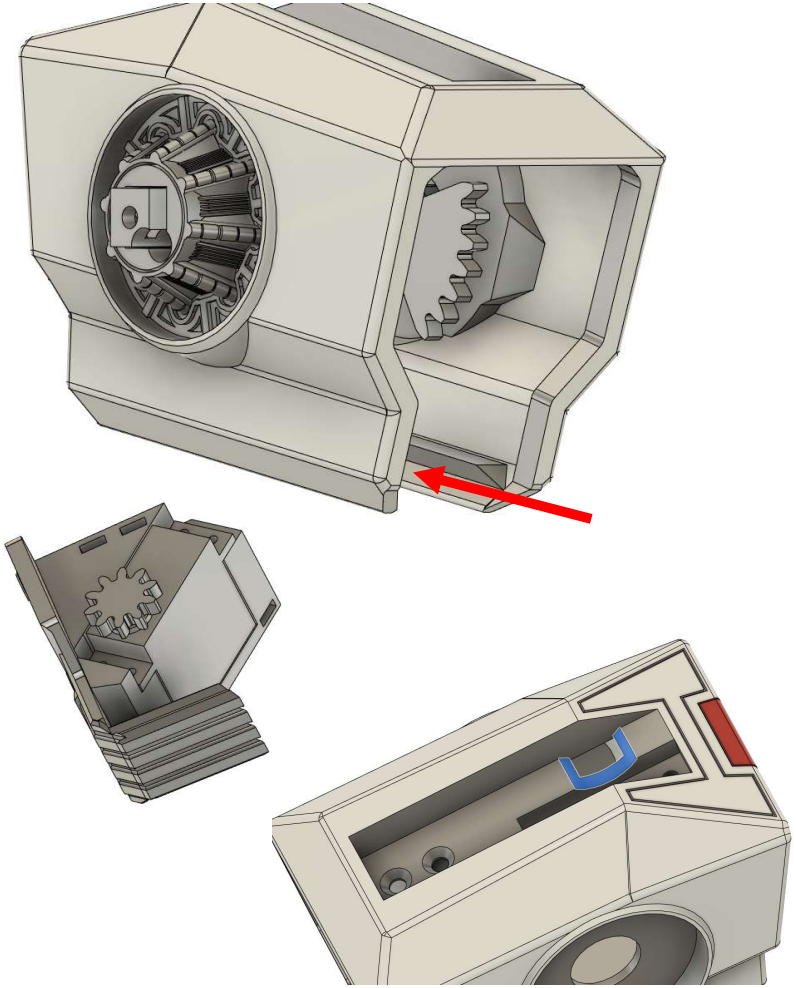

Put two M4 square nuts into the Mainbar, next push the InnerCores (aligning the holes) and the Mainhubs on both sides.

Take the servo (MG996R) and screw this into the BodyRearPanelA and attach the TiltServoGear to assemble the Body tilt servo mechanism.

Slot BodyRearPanelB into place (red arrow).

Take the servo cable, using a servo tester or similar, set the servo to the centre position.

The next part is to fit the body to the legs, sorting out the cables correctly whilst you do this. The assembly is quite fiddly. Feed the body tilt servo through the body and push this out through the hole in the body (blue). Feed the two leg cables through the holes either side, through the body and up through the same hole (blue). At this stage, you should have the Servo cable and the two leg cables coming out of the same hole.

Watch the cabling inside the body, you can use hot glue or epoxy to keep them clear of the gears inside.

Next, route the cables through the neck assembly, so the cables come through to the neck (you may need to loosen / remove the upper bolt) and push the neck into place.

Use two M4x15 countersunk Bolts and push them into the neck, then fix the nuts on the otherside and tighten the neck into place. This isn't easy and can be fiddly. A small roll of masking tape (glue side out) can be used to hold nuts and align them to the nut.

Hardware: MG996 Servo, M4 square nut (x2), M4x15 countersunk bolt (x2), M4 nut (x2)

The Body.. continued

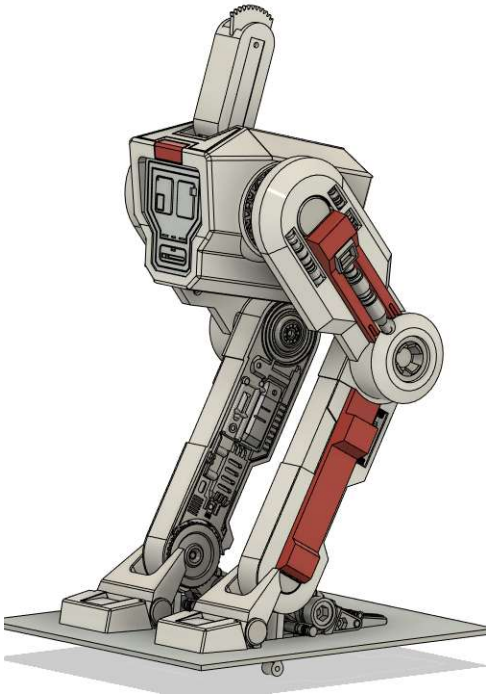

Next, push the bar into the two legs, pulling the cables through as you do so.

Take two M4x25 countersunk bolts, push these through the shoulder holes, into the bar, and tighten up, keeping the body level, you can tighten this to hold the body solid.
The CentreHubUpper should just clip into place over the bolts.

Finally we need to fit the servo. The body should move freely at this stage.

Firstly put two M4 square nuts into the slots in the BodyRearPanelA and put a little hot glue into the slot holes to hold them firmly.

Next take two M4x10 countersunk bolts, level the body and fit the BodyRearPanelA using the two bolts fitted from the top of the body.

Tighten to fix the panel / servo in place and the body should sit firmly on the legs now with little movement.

You've now completed the first part of the assembly, the legs and body.

You can fit the leg hubs also, a small blob of hot glue is what I would recommend as it does allow access later on if needed.

Next stage is the head build……

Hardware: M4x25 hex countersunk bolt (x2) M4 Square nuts (x2), M4x10 hex countersunk bolt (x2)

The Head.. Build part 2…

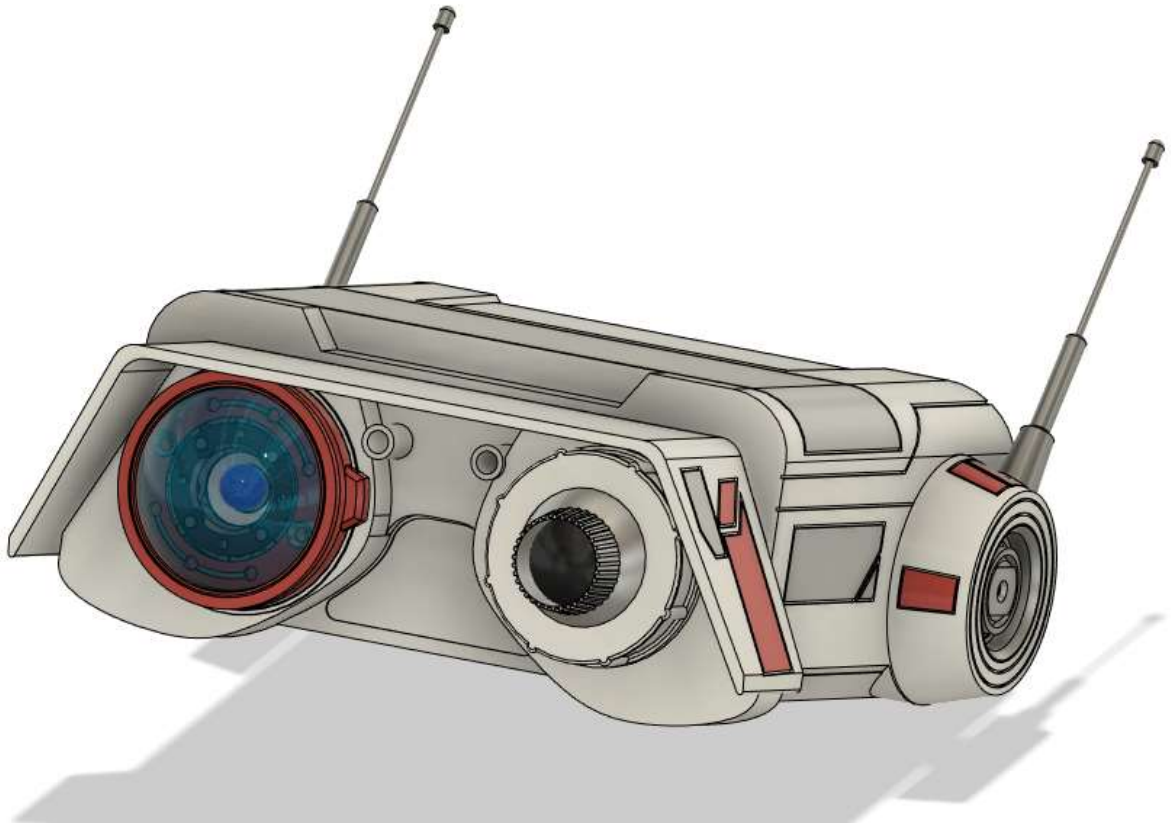

The Head…

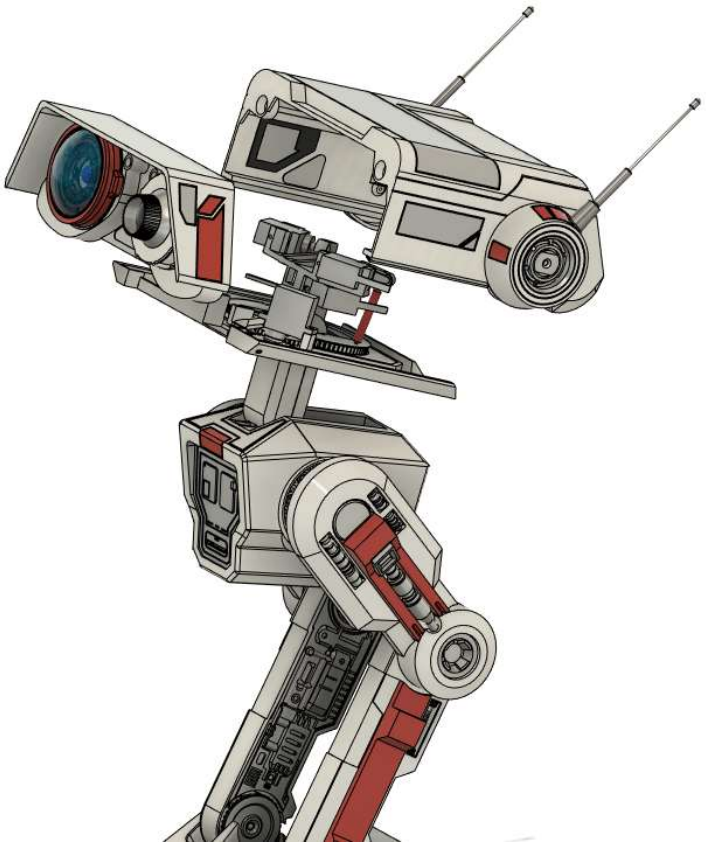

The head build is in three parts, the base, the front face and the main shell.

It's where most of the electronics and servos are located. There's 10 servos in all, 8 of which are in the head.

We have 6 MG90 servos and 2 MG92b servos. They're pretty much the same footprint, but the MG92b servos have roughly double the torque. Whilst it's a small droid, the design (huge head, thin neck etc) does mean that there a fair bit of stress on the servos, particularly the neck lift and head turn, hence we use the 92bs for this.

As most of the servos and leds are in the head, we use a adafruit 12 bit, 16 channel servo controller. This uses i2c bus to send data / clock via two cables and enables up to 16 servos / leds to be controller through 4 cables.

We use the 6 cables in the legs to push up 4 cables for the servo board logic (+5v, Grd, Data and Clock) and 2 cables for the servo power (+6v, Grd). We run separate servo power as the adafruit board needs it and the power supplied by the Arduino is nowhere near enough for servo driving. It's worth marking the cables 1-6 at each end so it's easier when it comes to wiring.

I would also recommend getting a servo tester and small 4.8V battery pack to set servos to the middle or right position as you build. This lets you test each mechanical component without having to run the whole thing at this stage.

The Servo Tester and 4.8v battery are readily available through Amazon, ebay or local model / servo suppliers.

The Head…

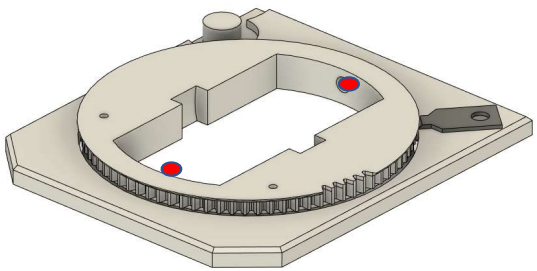

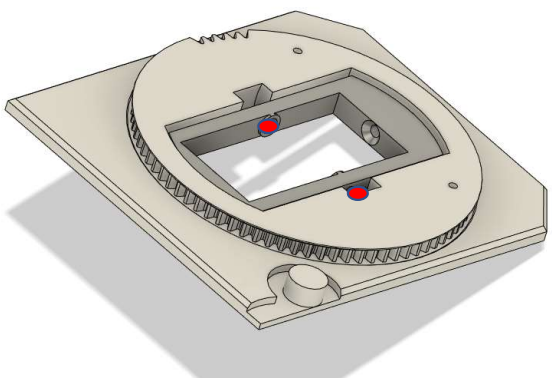

Red marked where the Brass Tubing is fitted.

The first part we'll assemble is the lazy susan base. This is the MainHeadBaseA and MainHeadGear, you'll also need the MainHeadBearingSeal. (.2 layer height or less).

Print these three parts, this is effectively a printed lazy susan that runs on 5mm bearings. You can sand / smooth the channel a little after printing before fitting the bearings.

You'll need a number of Delrin 5mm plastic bearings, I bought a pack of 100, you'll have loads left. Place the MainHeadGear into the centre, and feed the bearings into the hole so you've pretty much packed the groove with bearings all around. Then fit the MainHeadBearingseal and fit a M4x10 countersunk bolt and nut to hold in place.

Once assembled spin it a few times, it will be a little tight at first, but keep moving it and add a little oil if needed. You can sand / smooth the grooves if needed.

Next, we use the 4mm brass tube again, cut two small pieces, about 3mm which fit inside the holes either side. Again a tiny bit of 2 part epoxy and a small screwdriver to push into place. Try to just use a wipe of epoxy, you don't want it in the inside of the tube, just to hold it firmly in place.

Then print out the mainpivot, again glue two pieces of 4mm brass tubing, around 4.5mm long each into the 4mm holes as bearings and place the mainpivot into the centre.

Using a M3x8 and a M3x15 countersunk bolts (you can glue these a little), screw these into the mainpivot through into the brass tubing on the MainHeadBaseA to create a pivot. Note the diagram for orientation.

Hardware: M4x10, M3x8, M3x15 hex countersunk bolt, M4 nut, 4mm brass tubing (.5mm thick)

The Head…

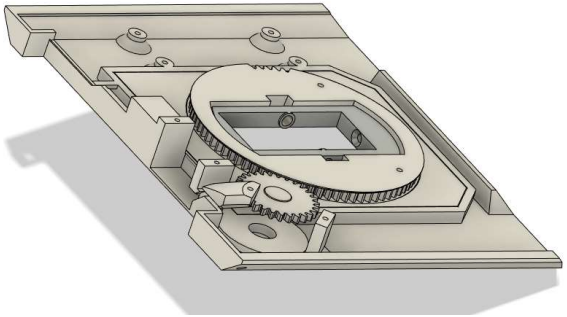

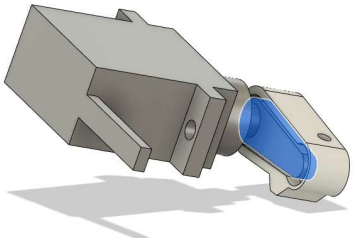

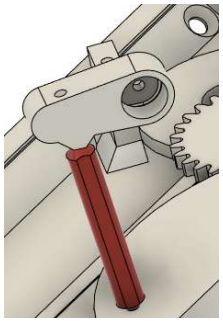

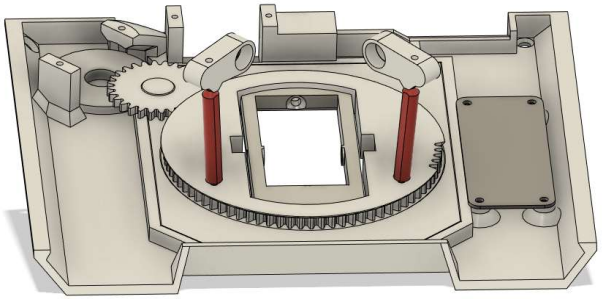

Next print the MainHeadBaseB and the headDriveGear.

The HeadDriveGear simply fits on the post (turn the main gear, you'll see the gap for the teeth to slot into, drop the gear in and spin it back to the orientation shown.

The assembly should then just slot into the mainHeadBaseB and fit snugly. You can glue a little, but I just used the friction fit. This is the base assembled.

Next we're going to add the servo control arms for the head tilt. The parts are the servorods (x2) and ServoArmA and B. We use the MG90 servos for this, so take the standard arm from the pack which came with the Servos and use two part epoxy to glue the arm into the ServoArmA and B as shown. Note the orientation, you want the glued assembled to fit as shown with access to the screw hole at the rear. Do this for both parts.

Next we're going to add the servo control arms to the main assembly. We're going to use flexible filament (whichever you like, I used standard ninjaflex but there's cheaper options).

Grab a length, 6 inches or so, and using a soldering iron create a blob on one end so it won't pull through a filament sized hole. Then, thread the filament from the bottom through the hole in the assembly (in the big gear, shown in diagram) and thread the glued servoarm onto the filament as shown. Finally, get a pair of snipe nosed pliers, pull the flex quite tight (stretch it a bit) and hold with the pliers tight to the servoarm. Then solder the end of the filament to create a second blob, make sure it's a solid blob and quite cool before releasing. This should give you a tight, but freely moving servo arm as shown (they stand unaided due to the tension). Repeat as shown.

Finally, solder as per instructions the 16 channel servo board and screw in place on the assembly.

Hardware: MG90 x2 (for the arm), Flexible filament, Adafruit 12bit 16 channel servo board.

The Head…

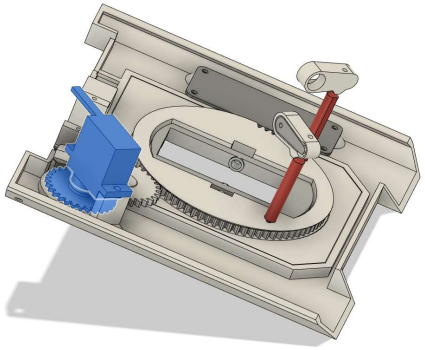

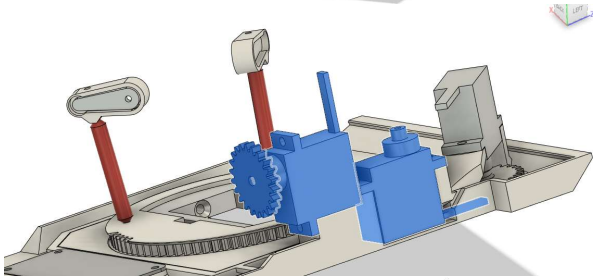

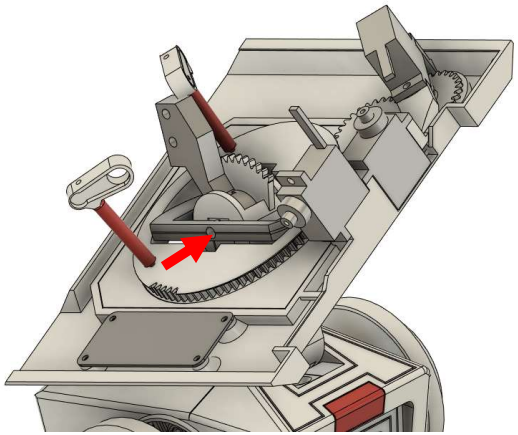

Next let's add some servos before we fit the main head frame to the body.

Print the headServoGear and attached this to a MG92b Servo with the screw provided, tighten this up as tight as you can. Then using a servo tester centre the servo and fit into the assembly with the head square to the centre frame using the two self tappers which came with the MG92b.

Next take two MG90s, take one and attach the "blinkgear" tightly from the front face folder using the servo screw provided, this is the vertical servo. Fit them to the front of the frame as shown using the self tappers provided. Note the vertical one only uses 1 self tapper at this stage to hold it in place, the second is added later. You'll see grooves for some of the cables, so run the cables as best you can at this stage.

Now we're ready to attach the head base plate to the main body. We'll hold this in place using the M3x35 bolt previously placed in the neck, remove this and feed the cables through the centre of the head assembly. Tilting the head to one side and holding the neck at tension, replace the M3x35 bolt (shown in the red arrow) through the brass tube pivot to attached the head mechanism. Note it will be very floppy at this stage as we need to add the servos.

Straighten / pull the cables so it's fairly tidy, this is the head assembly attached.

Next we'll add the neck and head tilt frame / servos which will control the head and neck movement. You'll need the servo tester again to centre these.

Hardware: MG90 (x2), MG92b

The Head…

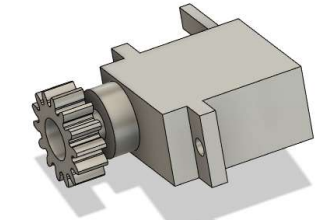

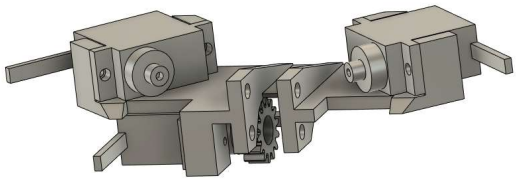

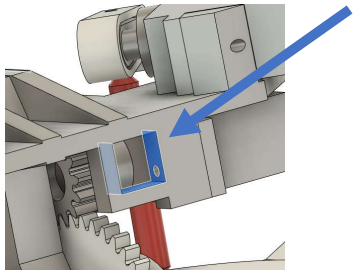

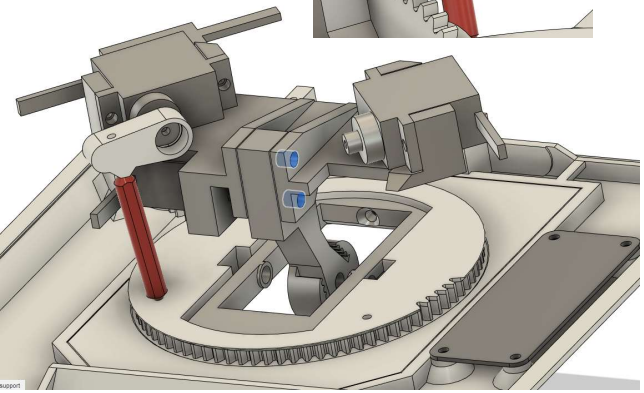

Now we'll put the NeckServoGear onto the other MG92b servo, again fit and tighten as tight as you can get it. This will lift the head using the neck tilt.

Take 2 more MG90s (the ones you previously used the arms from), these are the tilt servos. These fit onto the headframe as shown using the self tapping screws provided with the servos.

Using the servo tester, centre the two tilt servos and rotate the neck servo to familiarise yourself with the end limits / direction of the servo. The two tilt servos we'll fit them in the centre position but the neck we can choose either fully extended or contracted, you'll need to use the tester to make sure the servo is at the right starting position.

The headframe fits onto the neck as shown. ***All cables run through the hole (blue) in the frame to the front of the model, hold in place with a cable tie***, the neck gear will mesh with the gearing on the neck but will only be solid once bolted on using two M3x20 bolts and M3 nuts.

This is another fiddly bit, firstly position the neck and servo at either extreme using the tester, then use a reverse rolled up piece of masking tape to stick the lower nut and hold it in place as you push the M3x20 bolt through, let it grab the thread and then it's easy enough to tighten up with pliers / allen keys or screwdriver. The upper bolt is easier. Once bolted, test the servo so the neck lifts and retracts, adjust as necessary. You want this structure tight once you're happy.

Next, level / centre the head and fit the two servo arms to the servos with the screws provided with the MG90s, tighten in place and feel free to test again with the servo tester.

That's the six servos now fitted to the main head. You have two more (MG90) for the ears later.

Hardware: M3x20 bolts (x2), M3 nuts (x2), MG90 (x2), MG92b

The Face…

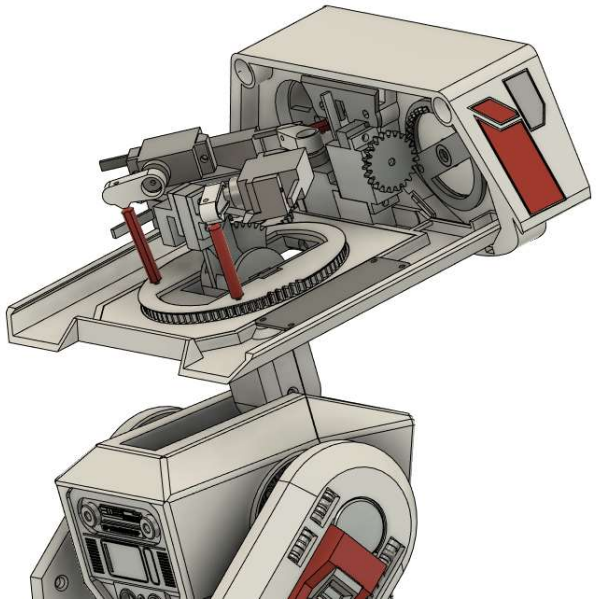

The next part of the front face, this is the fun bit where we add a load of personality!

Start by printing the front frame, this will need supports (couldn't find an easy way with making loads of parts or seams). Again, finish and paint this before assembly as with all external parts. You need two small pieces of 4mm brass tubing again (3mm long) which fit into the holoprojector eye socket, you'll see two 4mm holes above and below. As before a little epoxy glue holds in place.

The first assembly we'll work on is the holoprojector, print the eyeholo, holoServoarm and holoServorod. Similar to what we did before, use flexible filament and a soldering iron to attach the eyeholo, rod and arm together after gluing in the servo arm supplied with the MG90 (full instructions are written earlier in this document when we did the head tilt assembly).

Two M3x5 bolts are then used to go top and bottom of the holo into the brass tubes to fit the holorprojector into the frame and give a side to side movement which will ultimately be controlled by a servo.

Hardware: 4mm Brass tubing, Flexible Filament, M3x5 bolt (x2)

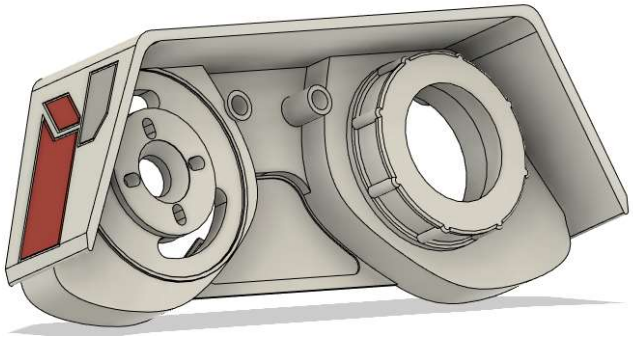

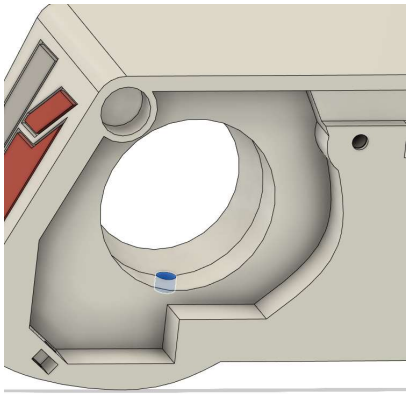

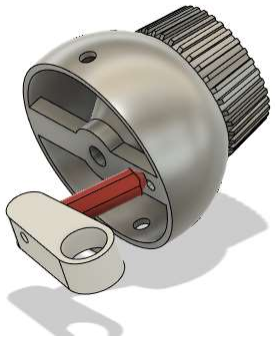

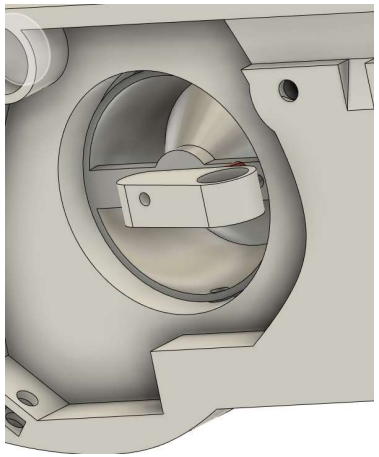

The Face…

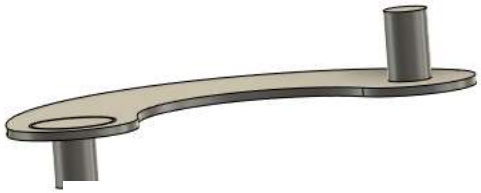

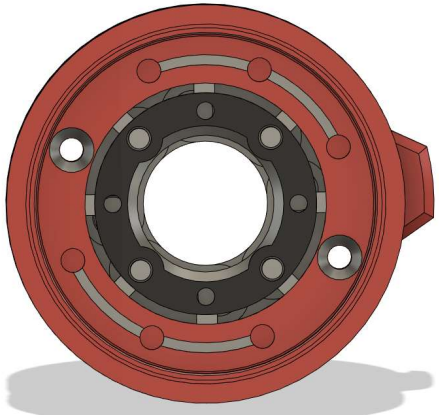

Next we'll assemble the "red" eye.

Firstly we need to make 4 iris leafs.. Print out 4 x Leaf and 4 x Leaf pins. These are tiny parts. We then assemble these into 4 leafs. The pin fits into the leaf as shown, a little superglue can be used (my were actually fine dry friction fit surprisingly).

Next print EyeRedRing and EyeRedRingB, again, paint and finish these before assembly. I painted these red, and used a black marker on the "B" ring to colour the centre black rather than mask and spray.

The leafs fit onto the EyeRedRingB with the pins in the holes as shown. Start with them all pointing outwards, then rotate each one inwards, stacking it on top of the previous leaf to they all rest on top of each other, it's a little difficult to describe, kinda like you would do with a cardboard box to close the top.

Align these so the iris is open and then fit to the EyeRedRing and make sure the iris is open.

Next, this can be fitted to the Front Frame, the other side of the pins fitting into the elongated holes, you'll see when it fits in as the iris can be operated by twisting the red eye and it should open and close easily.

You should also see the bolt holes align with the curved slots in the front frame.

Next print out the RearRedEye, RearRedEyeGear and two RearRedEyePins.

Hardware: None

The Face…

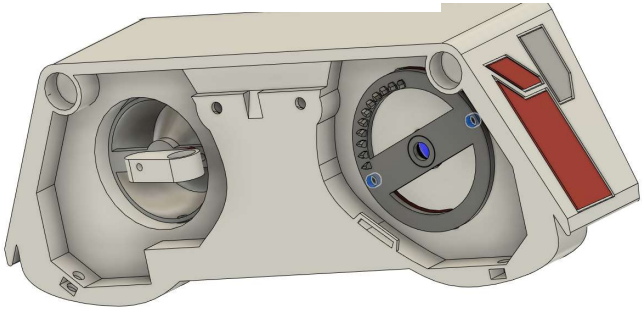

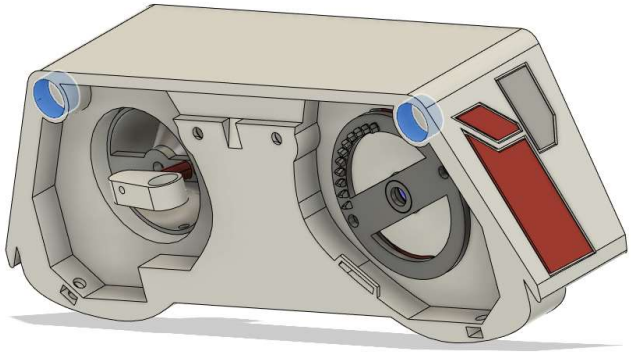

Take the gear and glue the rearRedEye in place (this holds the blue eye LED), paint the centre part silver as it's kind of a reflector.

At this stage, the two pins don't need gluing as they're spacers once we bolt these together.

Make up a 5mm Blue LED & cable, basically take some servo wire, solder the negative (brown) to the negative on the LED and the signal (yellow /orange) to the positive side of the LED, using heat shrink to insulate the cable. At the other end, we're going to crimp on a DuPont female connector on both and fit this to a DuPont plastic 3 pin connector similar to a servo connector. We want the negative of the LED to the Ground and the positive of the LED to the signal, this will be powered by the 16 channel board. Do the same for a 5mm Yellow LED for the Holoprojector eye.

Take the 5mm Blue LED and push this into the RearRedEye from behind, so the cable comes out the same side as the gears. Then use hot glue as a diffuser, filling the reflector space level with the edge.

Now you're ready to attach the rear gear assembly onto the main frame. Using two M3x20 countersunk bolts and nuts, bolt from the front and attach the nuts from the rear to attached the gear and led assembly to the front face.

Test it moves freely and the iris opens and closes.

At this point, you can also fit the 5mm Yellow LED to the Holoprojector, again a snug fit and holds nicely with just friction. Finally you can also glue in (with epoxy) two 10mmx5mm round magnets, watching for the polarity into the two outer holes in the frame.

Hardware: 5mm Blue LED, 5mm Yellow LED, Servo Cable, DuPont crimping set, M3x20 bolt (x2), M3 nut (x2)

The Face…

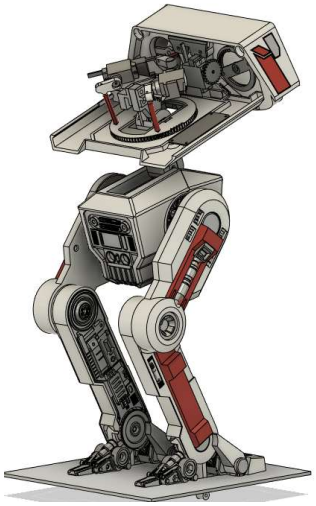

Now we're going to attach the face to the main body.

Firstly, take two M3 Square nuts and place them in the slots (marked in blue) in the front face assembly, hold in place with hot glue.

Then take two M3x5 countersunk bolts and attached the front face to the head base and tighten. At this stage the red eye servo should not be that meshed with the gear, so you can adjust the movement.

Next, centre the Holo servo using the tester and fit the servo arm, fixing in place with the servo screw provided.

Then, check the extremes of the Red eye blink servo, and test the meshing to get the servo correctly aligned / positioned.

Next, print and fit the FrontWireCover, this holds the cables from the servos to the left and the blink servo using two M3x5 countersunk bolts and nuts. This also has the second hole for the Blink Servo self tapper.

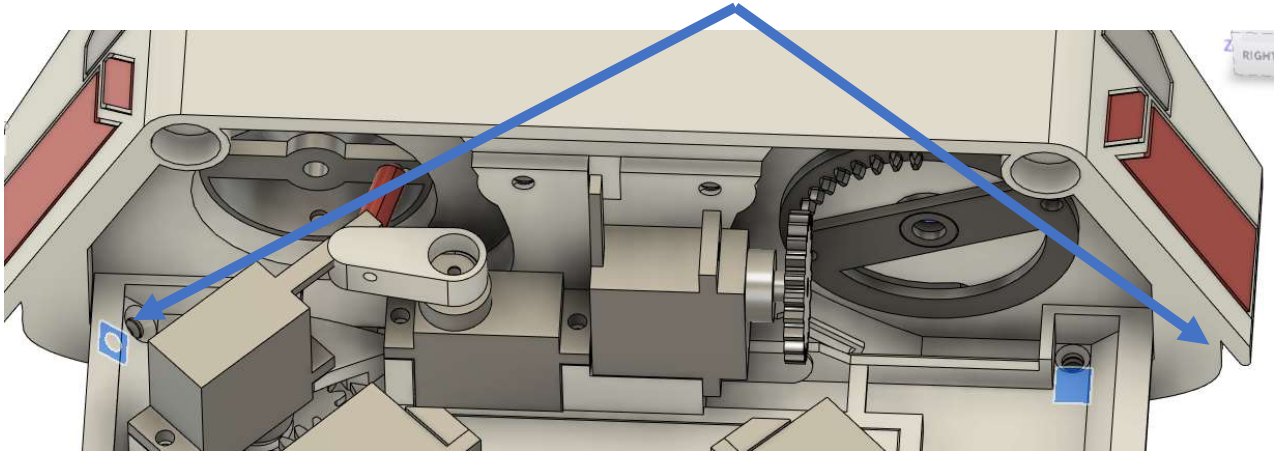

(You may need to remove the gear to get the self tapper servo screw in place).

Once the FrontWireCover is in place, the servo screwed in and the blink gear in place, the mesh should be solid and drive the iris blink.

You can also test the holo movement using the tester.

Hardware: M3 Square Nut (x4), M3x5 bolt (x4)

The Face…

You've now completed the first two parts of the head build.

At this stage, it's time to connect and tidy the cables.

Firstly, you have a loom of cables coming from the neck and tilt servos, this is static as the head moves, so bunch all the cables together where they come out of the Frame (in blue), so take both tilt cables, the ones coming from the neck and the neck servo and cable tie them as close to the hole marked in blue as possible. All these cables will go to the servo board, so a couple of cable ties will make up a loom which can move freely as the head moves.

Next address the servos attached to the moving part of the head, these are static when the head moves, so run them around the frame, cable tieing into place as needed (and hot glue if required) so they route to the servo board but don't interfere with the gearing or servos.

The uncrimped cables from the legs will need DuPont connectors for the servo board and two will be used for the power connector, we'll cover this in the electronics.

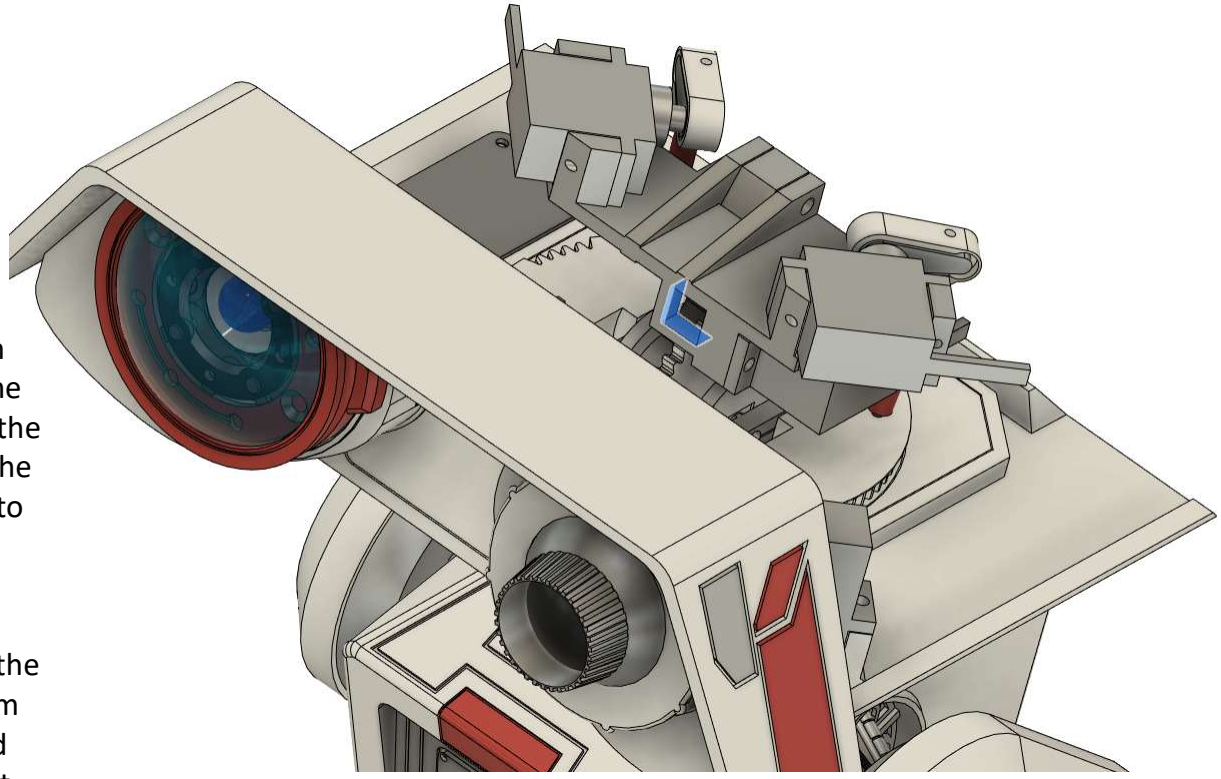

The Head Skin

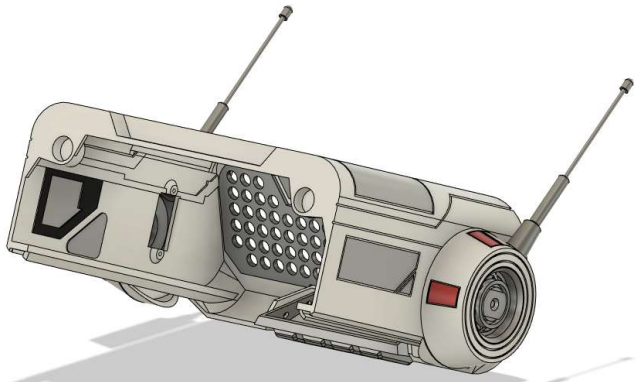

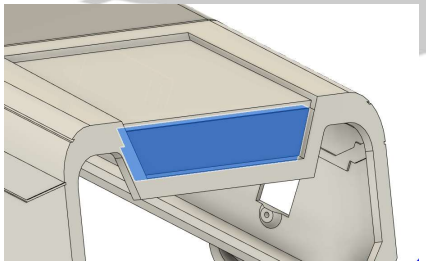

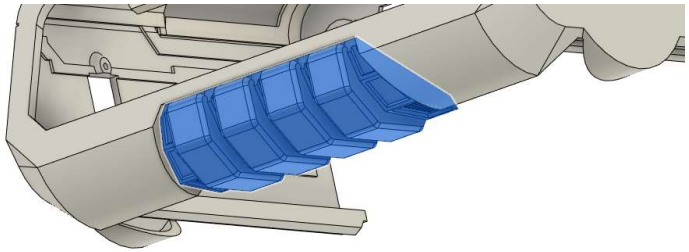

The final part of the head is the main skin which slides over the head mechanism.

The assembly is pretty simple, I would as usual paint all parts before assembly.

Take the main skin, note there's two holes for 10mmx5mm Magnets which attach to the faceplate when it's slid on. I have to say, I didn't fit them in the end as the friction fit was strong enough, but the magnets will hold the face firmly in place. If you're using the magnets, firstly make sure you've for the polarity correct and use 2 part epoxy adhesive to glue them both in place.

Firstly let's finish the frame build. There's two parts which are glued into the main frame, the MainHeadPlate covers the hole at the rear (shown in blue), this can be glued and sanded / finished in place before painting as it's part of the white frame. I did this is eliminate support.

Next is the Rearheaddetail, this greeble is typically painted a different colour, so paint before assembly. You'll see a couple of holes in the part and a couple of locating tabs in the main head. These are just to get the alignment correct.

Once painted, glue this part in place and you've assembled the main head skin frame.

Next you'll fit the Servos & Ears.

The Head Skin

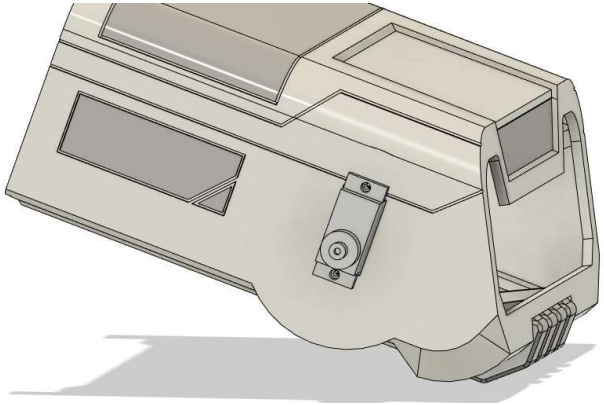

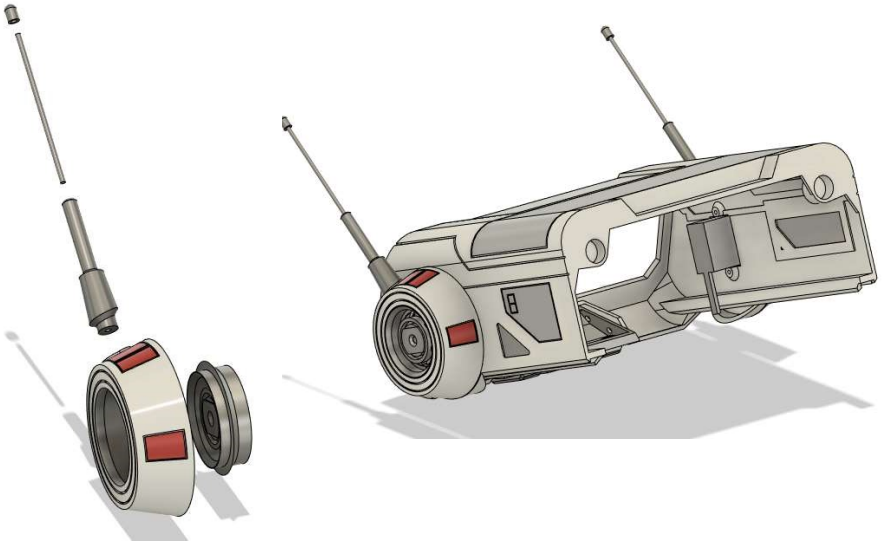

Take two MG90 Servos, these simply fit into the two square holes in the main skin and should screw in place with the self tapping screws provided.

Fit both Servos, note you need to get the servo pivot in the centre of the ears as shown.

Next, let's assemble the ears. They come in 4 printed parts and a length of filament (or you can use wire, piano wire etc). As before, print and paint, glue the centre hub (B) to the Ear (A) and the glue the AerialBase into the main assemble. Then the filament glues into the AerialBase and the tip glues to the end to create the final assembly.

Repeat this for the other ear.

Next, centre the Servos firstly with a Servo Tester and attached the ears with the Servo Screw provided, making sure both ears are aligned. You can tweak the alignment later in once the electronics are in place.

The final part of the assembly is the rear LED matrix panel. Print out the rear panel in preparation.

Hardware: MG90 Servos (x2)

The Head Skin

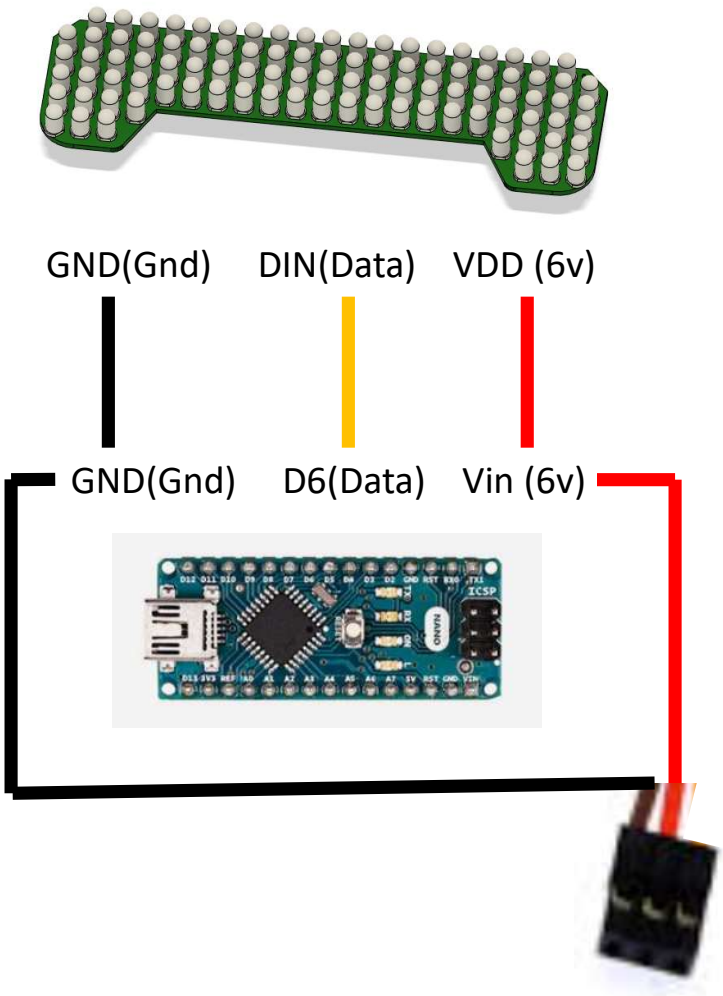

For the final bit, we're going to fit the rear LED matrix. The board files are available in the shared folder if you want to do a local run, alternatively the board is / will be available in the group. It's a custom PCB and has 96 APA106 LEDs. The APA106 is an addressable LED which can be individually controlled and is a full RGB LED, so can pretty much display any colour.

To solder the board, well, firstly it's a lot of soldering. You'll see on the board the component diagram shows a Flat Spot on the LED, make sure you align the flat spot in the LED to the image on the board and solder the LEDs in place.

Note, there's 96 LEDs with 4 pins per LED, so that's 384 solder joints.

Also, the four legs are close together, so use a fine solder tip and fine solder along with a head mounted magnifier. Take it slowly and watch carefully for pins shorting across as the solder flows. I checked each LED as I went with a Multimeter to ensure there's no shorts. Take it slowly. If you do get solder across the pins, re-melt and blow hard on the joint to clear. Watch for the excess you blow off that it doesn't cause shorts else where (I blew any excess away from the component I soldered previously).

There's also space for capacitors, however I found I didn't need them, just the 96 LEDs and the three pin header pin.

Finally create the wire loom, the board is connected to a Arduino Nano, pin 6 is used to control the display, power goes from VDD to VIN (NOT 5v) Grn to Grn. We will use the 16 bit Servo Controller to power this, it simply plugs into the board on a free Servo Slot.

Hardware: MG90 Servos (x2), 3 pin header, LED Board, APA106 (x92), Arduino Nano

The Head Skin

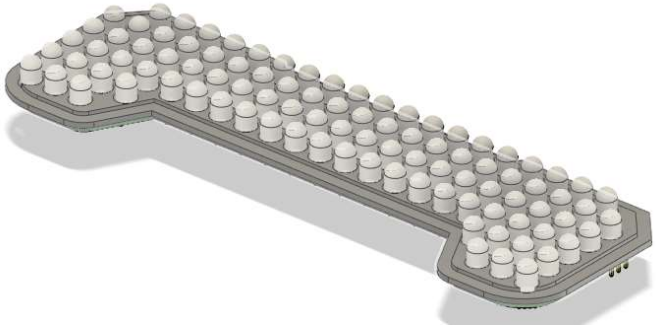

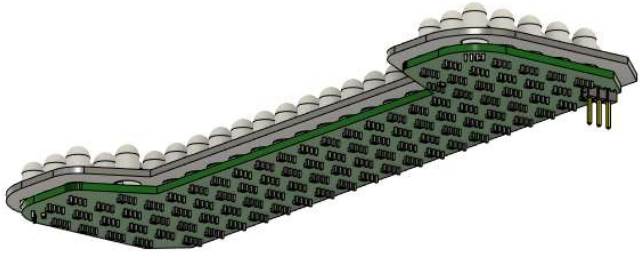

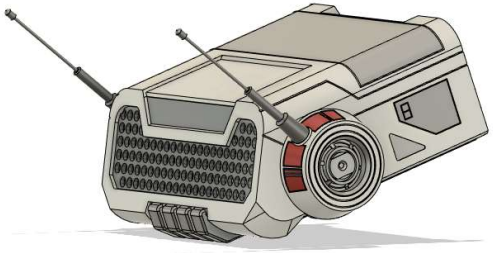

Next, fix the Board into the RearPanel after painting / finishing it.

The LEDS should come through slightly, it can be held in place with hot glue.

I used Hot Glue also to attached the Arduino Nano to the rear of the Board (taking care not to short the rear of the Nano to the Board. This should create a self contained display board with just the power cable to connect.

Finally slip the assembly into the main headskin assembly. Note you may have to remove one of the Servos / ears to get this into place.

Once it’s seated into place, again I used hot glue to hold this in place to allow access later if I need to gain access for maintenance.

This is the head skin complete now, the skin simply plugs into the 16 channel servo board (the ears go in 0 and 1 and the display board in any free slot), make sure the plugs are oriented correctly.

You’ve now completely assembled the main build of BD-1!

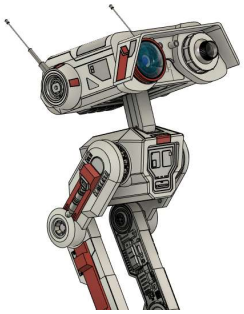

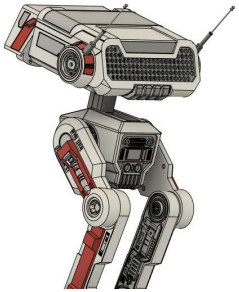

Controller

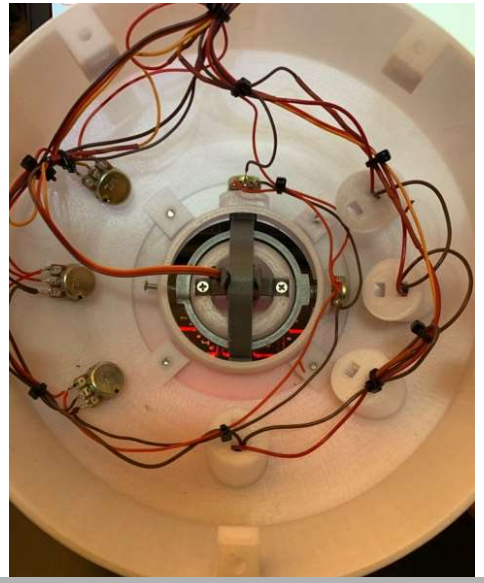

The controller is a printed 3 axis gimble with 4 buttons and 3 knob controls.

The 4 buttons have 3 which control the sounds and 4 switches to auto mode.

The main gimble controls the head.

All parts are printed without supports, in the orientation of the files.

Typically I print 3 outer layers (1.2mm walls), 6 upper (1.2mm) and 6 lower layers at .2 layer height, but use whatever settings you're comfortable with.

Print all parts out firstly.

Hardware, you'll also need 6 potentiometers, 4 microswitches (5mm deep) and cabling (26AWG) and some Dupont connectors / crimper. (more details in the electronic section.

Controller

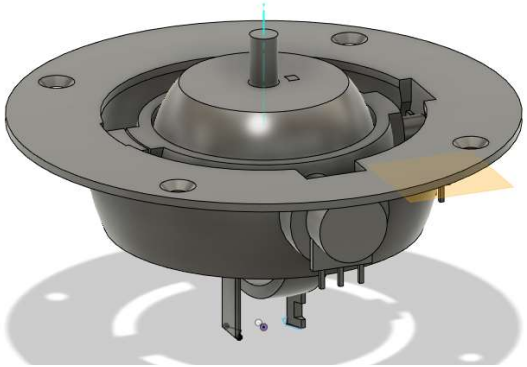

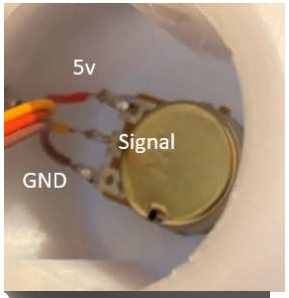

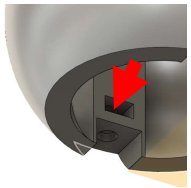

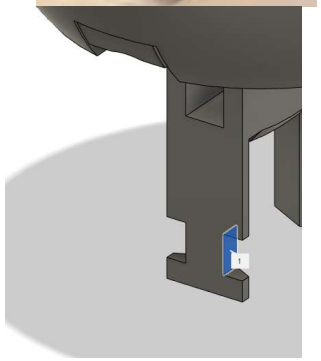

Firstly let's assemble the gimble. This is a three axis controller.
Like a standard joystick but with a pot at the top which you can twist to control the head turn. This controls the nod, turning and tilting the head.
This works with three potentiometers, one for left to right, up down and twist.

Firstly let's assemble the centre ball. Print it and take one of the pots. Solder three servo cables to the pot, it's always the same config, 5v, gnd and signal in the middle as per the diagram. (check out the wiring section at the end to see the overall wiring diagram, I'm not going to do a step by step wiring instructions, this is the physical build.)

Push the soldered pot through the hole and use the supplied nut to tighten / hold in place.

Next fit the Ball post. Use two 3mm square nuts which fit either side in the centre ball.
Then attach the ball post using two M3x10mm bolts. The cable can be held in place with a cable tie on the slight indent on the ball pos
I'm using 4mm bronze tube as a "bearing", it's .5mm thick, so fits into the holes and works with 3mm bolts.

Fit two small pieces (3 or 4 mm) into the two holes in the ball. I use a tiny blob of two part epoxy glue to hold this in place.

Materials: M3 square nuts (x2), M3x10mm Countersunk Bolts 4mm bronze tube, one 10k metal Potentiometer.

Controller

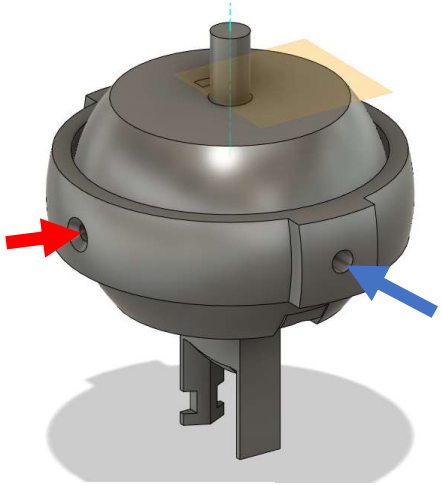

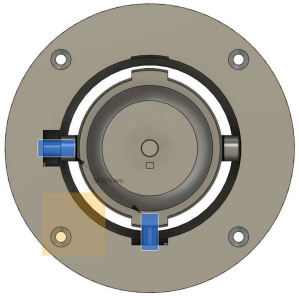

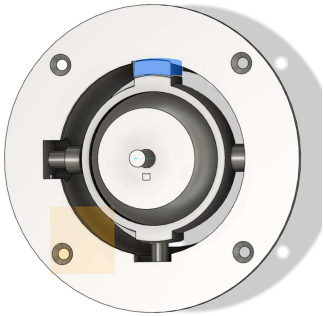

Next take ball two, this fits over the centre ball.

Firstly, similar to the centre ball, one small length of the 4mm Bronze tubing is fitted to the end holes. (marked in blue). This is a “bearing”. The larger hole is for the potentiometer.

Next, take two M3x10mm countersunk bolts and tighten them into the countersunk side hole (in red). Use a drop of superglue or epoxy to hold them in place but they should self tap OK.

The centre ball should move freely at this point.

Next take Ball three, add one small piece of 4mm Bronze tube to one side. The larger hole is for the 10k Potentiometer. Again, glue in place as described to create the bearing.

Ball three then slots over the assembly, with the arm fitting between the ball post.

The whole assembly then fits into the main top plate, you need to fit the pots in, tighten them up, then add the outer balls pushing them into the pots firstly, then adding the M3x10mm bolts to hold them in place. (Pots in blue).

When adding the last bolt, Ball4a adds a spacer to improve the stability, put this in place and tighten up the bolt. This is the gimble assembled.

Materials: M3x10mm(x4) bronze tube, two 10k metal Potentiometer.

Controller

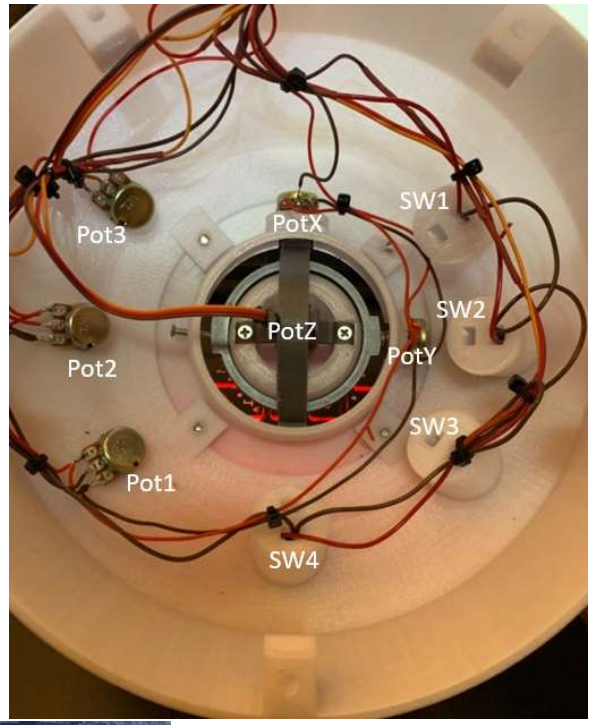

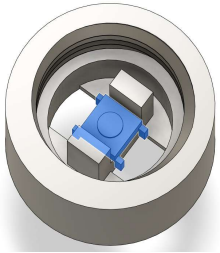

Next lets assembly the main body of the controller.

There's two types of input on this, the pot and the switch.

The pot is simply a matter of screwing the three pots into the relevant holes and soldering the cabling. (wiring diagram later in the instructions). SW1, 2,3,4 (take a note of the signal cables as you'll need them later.

Then it's the switch assembly. These use 5mm micro switches (as shown in the photo), soldered with two cables, gnd and signal (more info in the wiring section and the videos.

Assembly is fairly simple and glueless ☺

The switch consists of three parts, the button holder, which the switch sits on, the button core which is.. well the button… The button holder goes in first to the button holes in the main frame, then the switch, then the button core. Finally take the button screw which should screw on top to hold the whole assembly tight.

Note the pics show this as a separate assembly, but this is part of the main frame.

Repeat this four times to assemble all the switches.

Materials: 3 10k metal pots, 4 5mm Microswitches, cable / solder.

Controller

Finally it’s the assembly of the whole controller.

The gimble fits into the main controller, using 4 M4x5mm bolts and M4 Square nuts, then finish the cabling / soldering.

In the wiring section, I’ve suggested using DuPont connectors to create standard interfaces (see instructions).

Finally when you’re happy, attach the base, again 5 M4 Square nuts and 10 mm bolts will suffice.

There’s also a small bridge near the cable exit to use a cable tie to tighted up the cables / wiring harness.

This pretty much completes the physical assembly of the gimble / controller. Using the electronic instructions and videos should provide a step by step guide to getting the whole thing operational.

Materials: M4 Square Nuts (x9), M4x5mm bolts (x4), M4x10mm bolts (x5)

Base Assembly

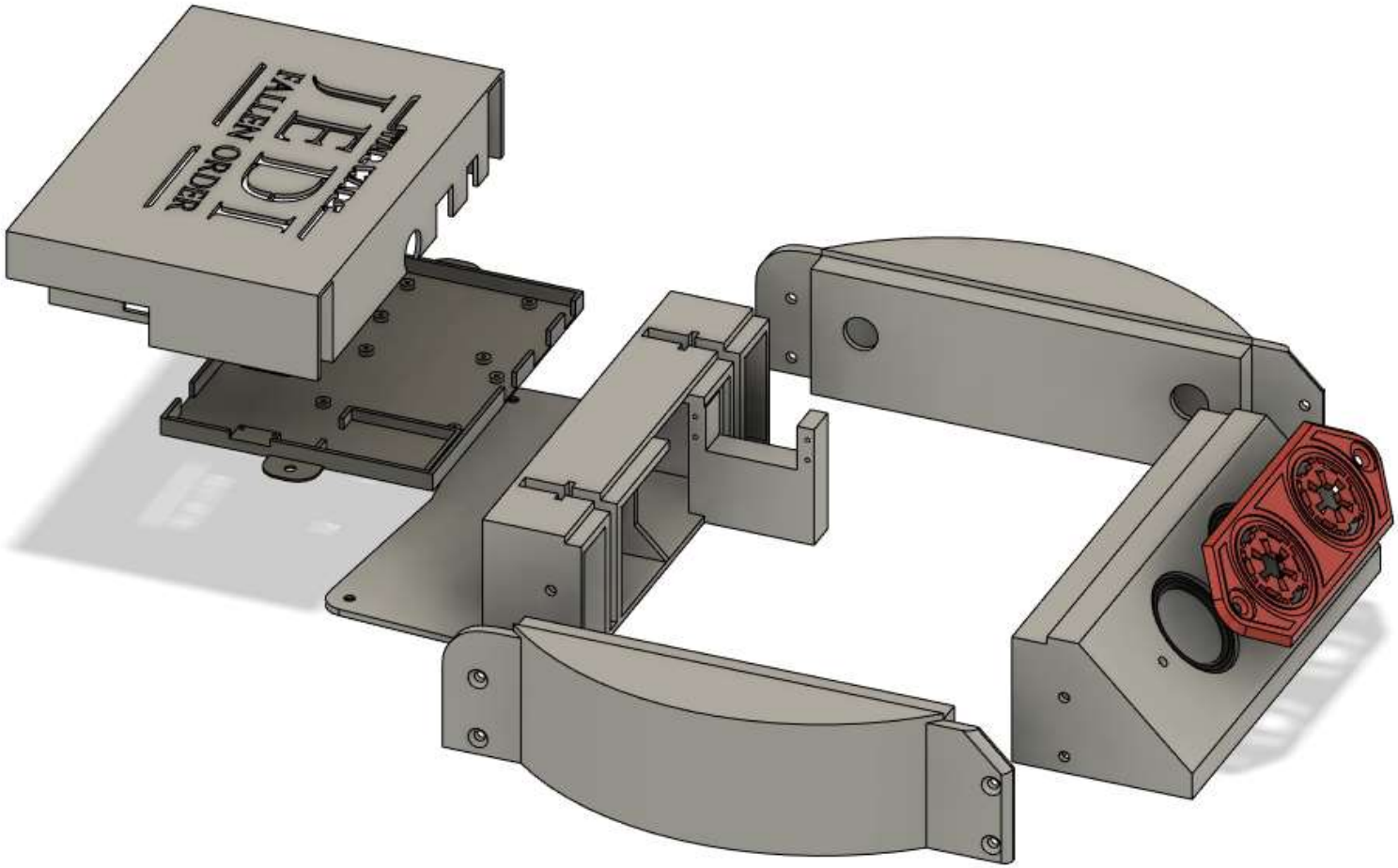

Positioning Components

TPA3116D2 Dual Channel amp 2x50 w

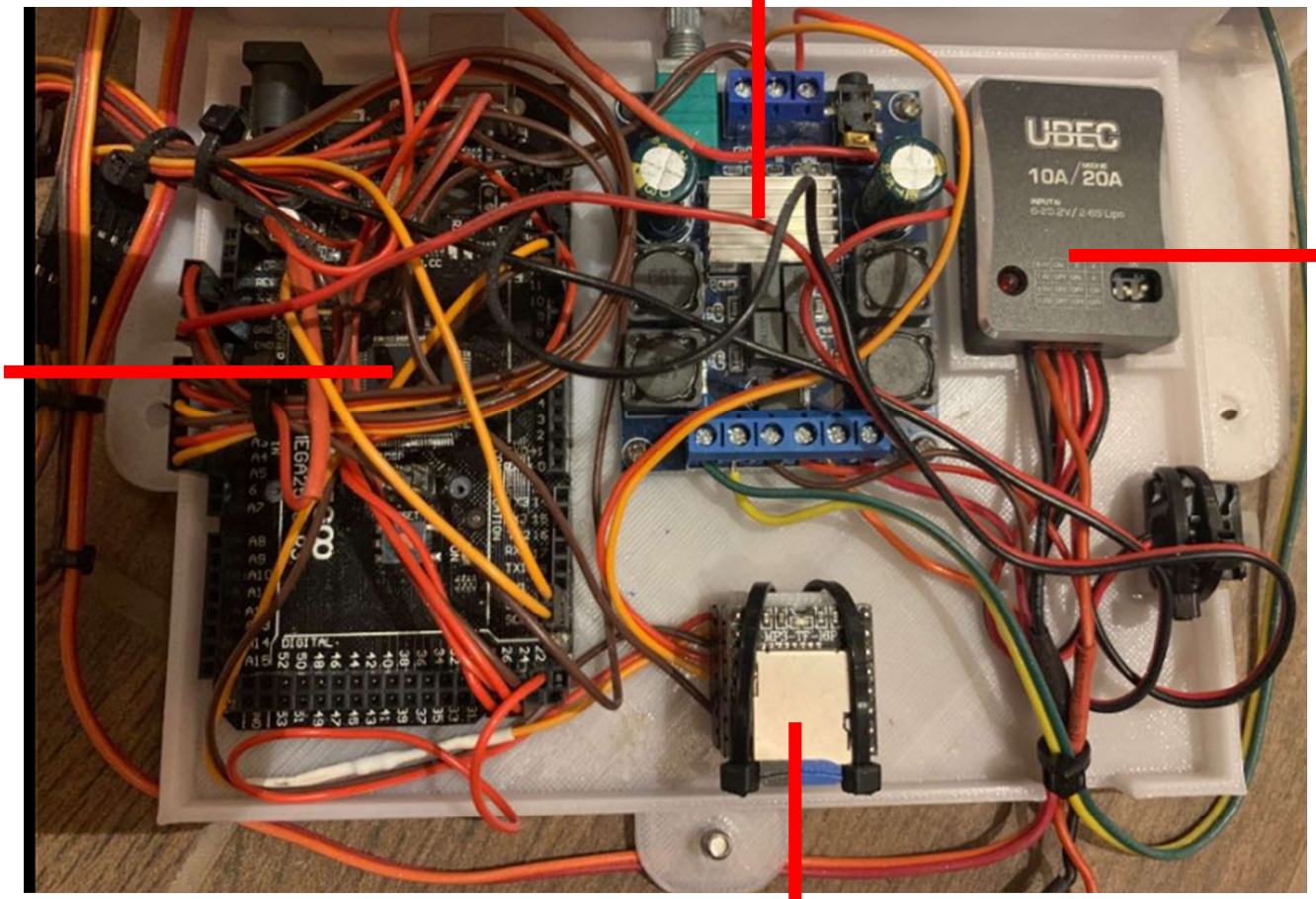

10Amp
UBEC

Ardunio Mega

DFPlayer Mini

Base Assembled

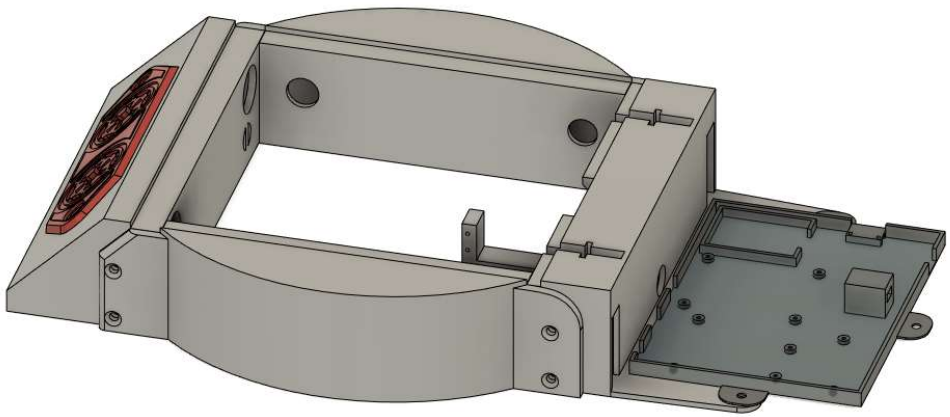

Note: There's fixing for the Servo leg lift and springs / pulleys to take some of the load. Due to the stress on the legs and weight of the assembled droid (also lots of animation anyhow) I chose not to implement the "Stand up" function.

With electronics cover fitted.

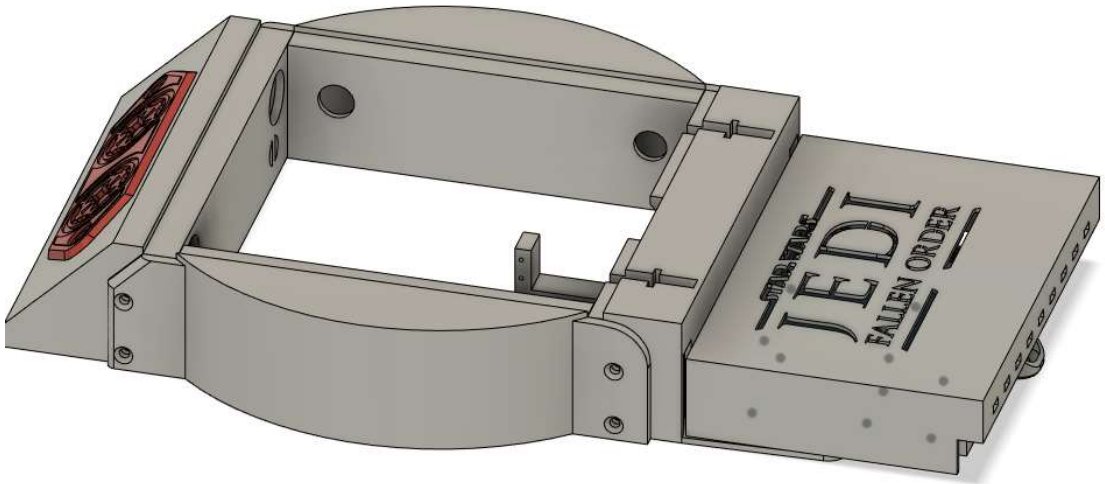

Electronics

There’s also a 3 part video tutorial cover all the electronics from a basic level through to all the code and controls.

We’re using BD-1 as full tutorial to get everyone started on power, electronics and animations / servos.

It’s a great starter build for people to learn all aspects of printing, building and electronics.

Video Links

Part 1: Overview, Input and Controller https://youtu.be/9GT-QIEw9hE
Part 2: Power & Wiring https://youtu.be/ZETdowwo1HQ
Part 3: Servo cabling, Ardunio code & Wiring Looms https://youtu.be/VZsHKaELJYo

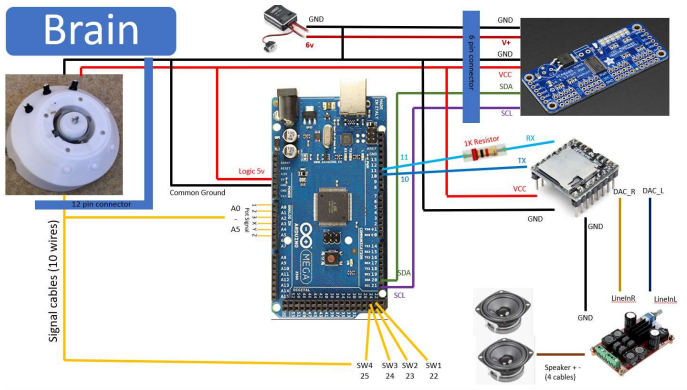

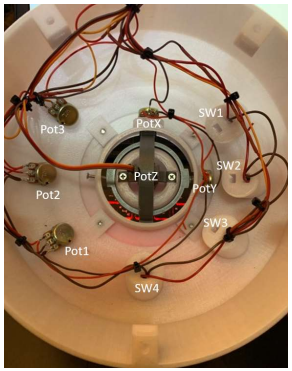

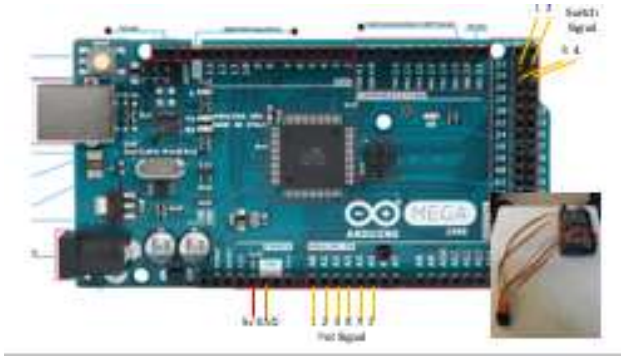

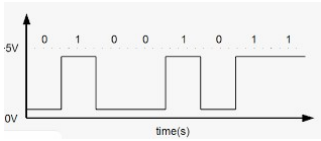

Power

Input

Brain

Output

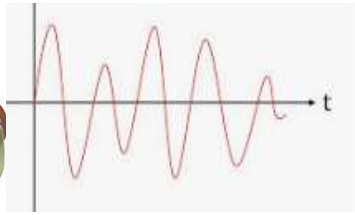

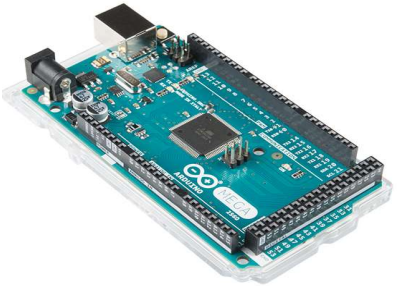

Input

Connector Reference

Gnd		Pot1
5v		Pot2
SW1		Pot3
SW2		PotX
SW3		PotY
SW4		PotZ

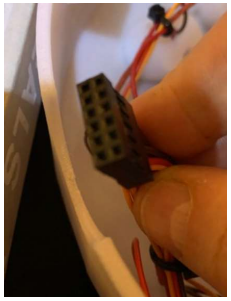

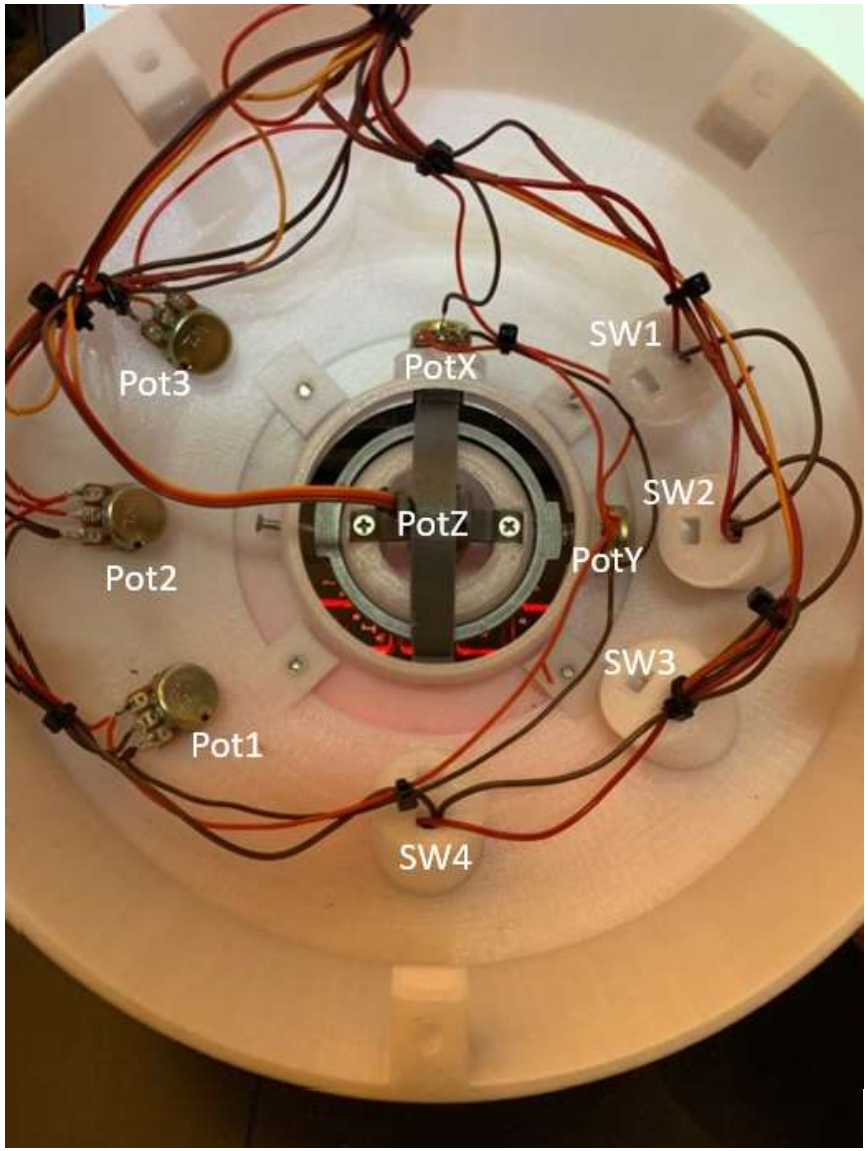

Input Functions

SW1 – 3 – Sounds
SW4 – Auto / Manual
Pot1 – Stand up
Pot2 – Body roll
Pot3 – Neck lift
PotX – Side to side tilt
PotY – Nodding tilt
PotZ – Head Turn

Input

Wiring diagram

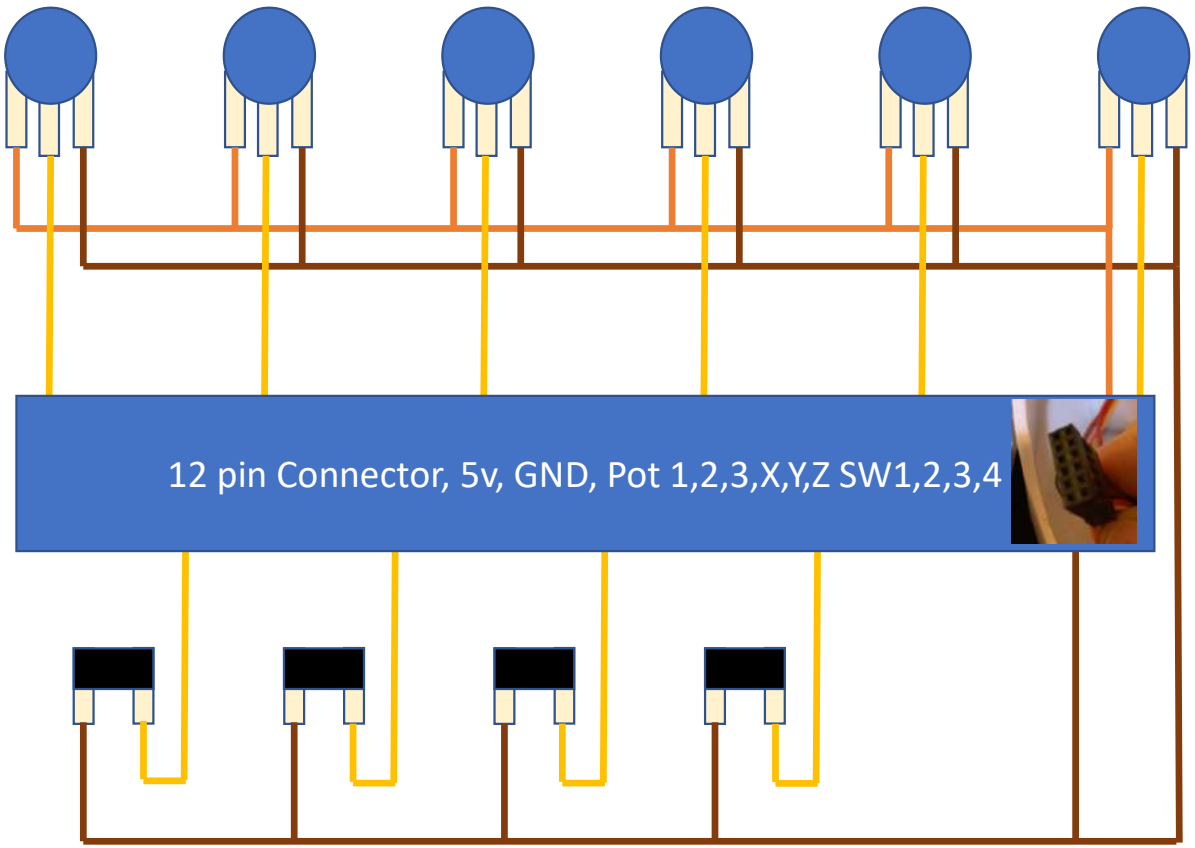

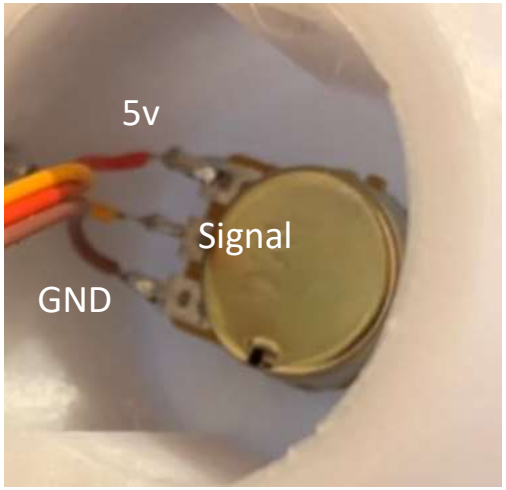

Pots are connected to 5v and GND with the signal cable in the middle as shown. The switches have one side to GND and the other goes back to the Arduino, when presses this connects Signal to GND

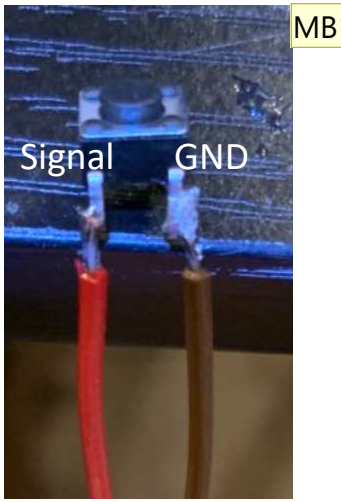

Slide 39

MB1 Mike Baddeley, 23/11/2019

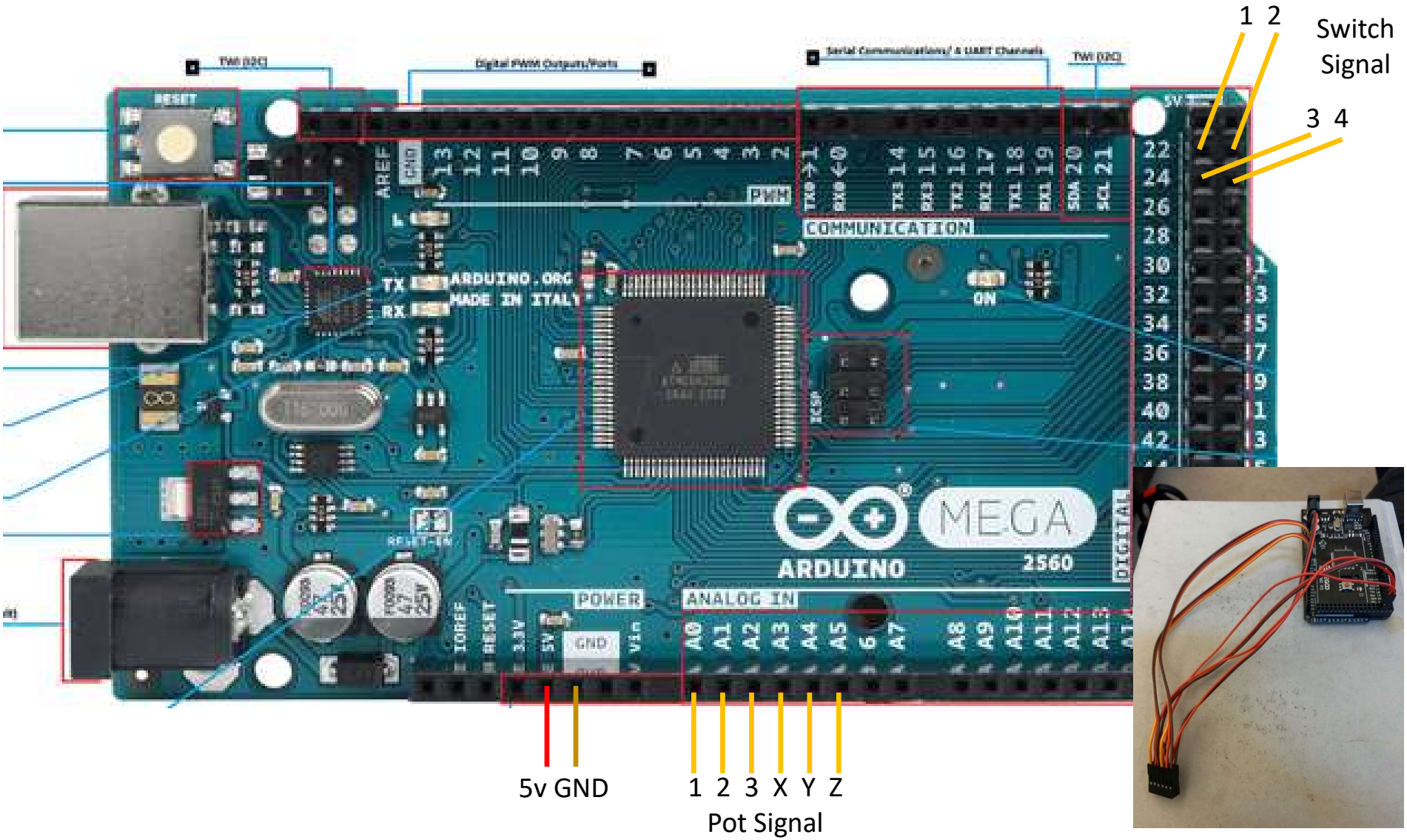
1 2
Switch Signal
3 4
5v GND
1 2 3 X Y Z
Pot Signal
TWI (I2C)
Digital PWM Outputs/Ports
Serial Communications/ 4 UART Channels
TWI (I2C)
RESET
AREF
GND
13 12 11 10 9 8 7 6 5 4 3 2
PWM
TX0 1 RX0 0 TX3 14 RX3 15 TX2 16 RX2 17 TX1 18 RX1 19 SDA 20 SCL 21
COMMUNICATION
22 24 26 28 30 32 34 36 38 40 42
TX
RX
ARDUINO.ORG
MADE IN ITALY
ON
MEGA
ARDUINO
2560
DIGITAL
POWER
ANALOG IN
IOREF
RESET
3.3V
5V
GND
Vin
A0 A1 A2 A3 A4 A5 6 A7 A8 A9 A10 A11 A12 A13

Input

Schematic

12 pin Dupont Connectors

Two 12 pin connector and a cable in between enables easy transport / dissasembly

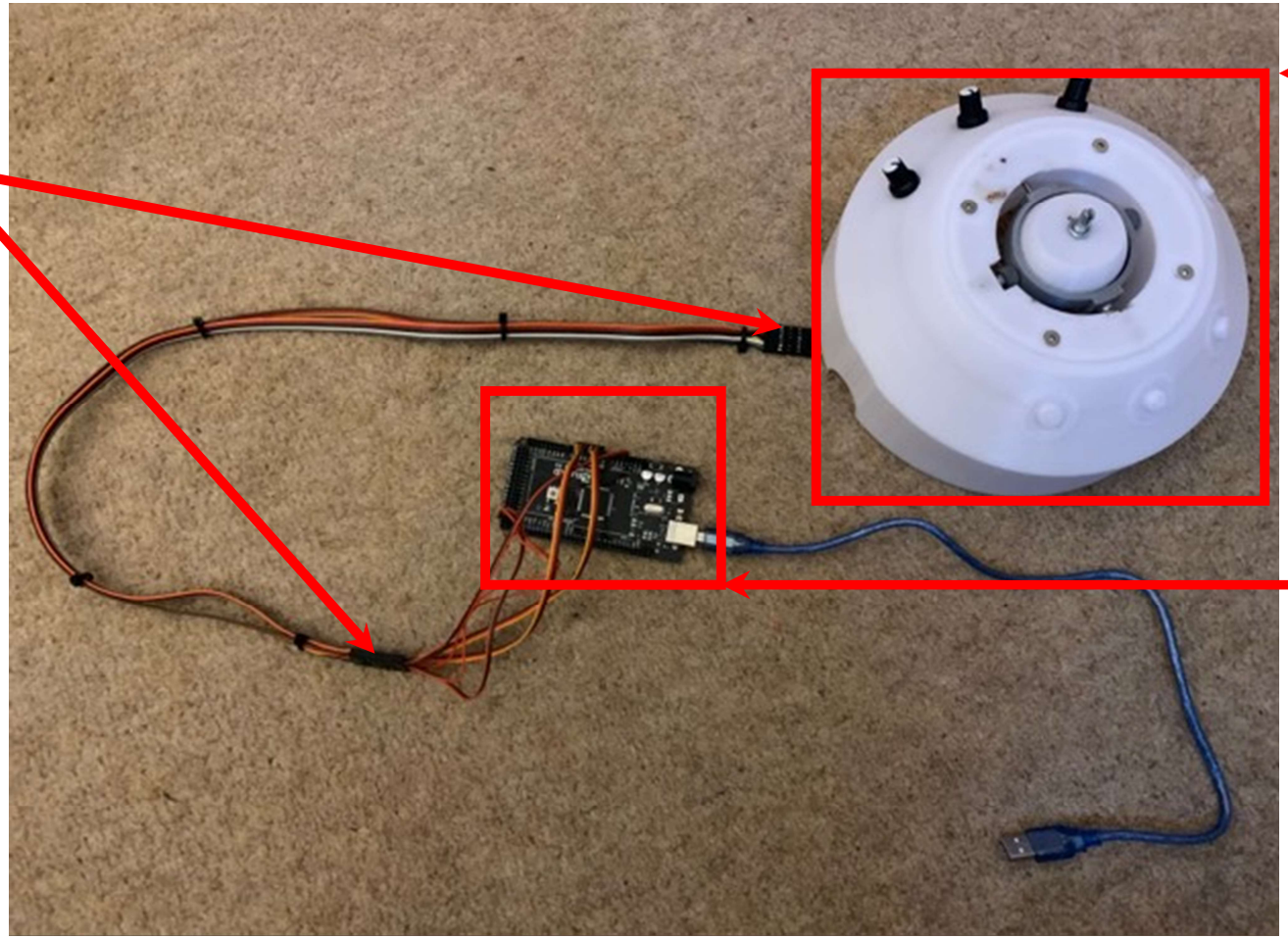

Controller assembly

Arduino MEGA

Input

I would recommend testing the connections with a meter before powering up.

Once fully tested and ready to power up, connect the USB cable from the PC to the Arduino and upload the “INPUT_Controller_Test” sketch to the Arduino Mega.

Use the Serial monitor to test all the connections, note the max and min values for POTX and POTY. (others should go between 0 and 1024).

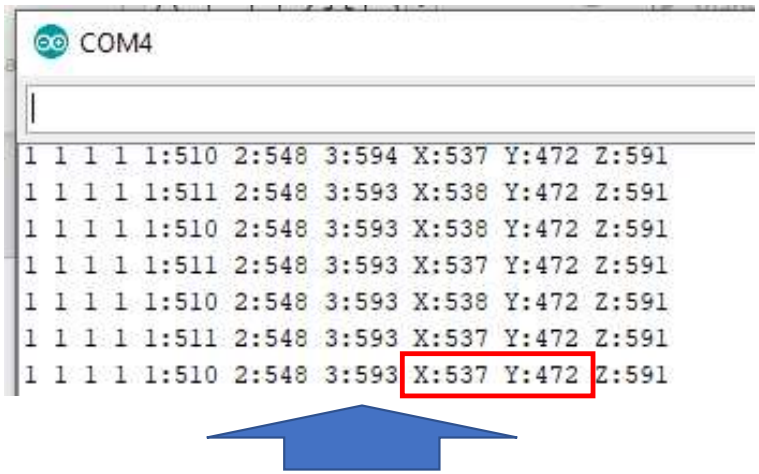

SW1, SW2, SW3, SW4, POT1, POT2, POT3, POT4, POTX, POTY, POTZ

Power

Power

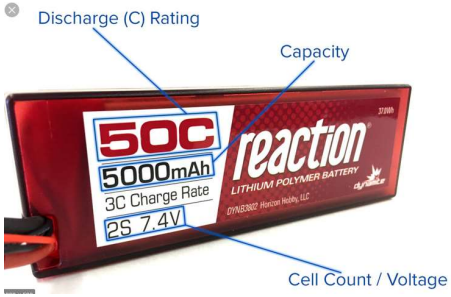

Control

Protection

Voltage

Water = Charge
Pressure = Voltage
Flow = Current
https://learn.sparkfun.com/tutorials/voltage-current-resistance-and-ohms-law/voltage

Power

Power
Main power output
DC
7.4V

Batteries Joined in Parallel

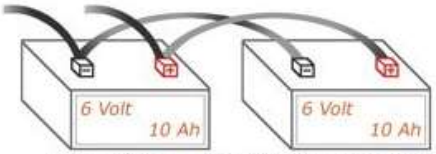

Same Voltage, double Capacity (Ah)
6 Volts, 20 Ah

Negative
(or Ground)

Positive
+7.4V DC

Fuse
(10 amp)

Protection

Control
Switch

GND

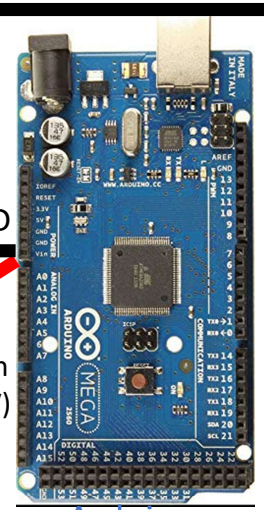

Arduino

7.4V - Vin
(7V – 12V)

GND

Amp

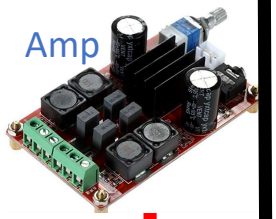

7.4V - Vin
(5V – 24V)

6V
(Servo
Power)

GND

GND

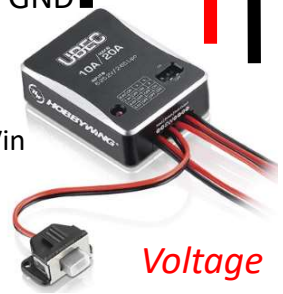

7.4V - Vin
(7.4V)

Voltage

Water = Charge
Pressure = Voltage
Flow = Current
https://learn.sparkfun.com/tutorials/voltage-current-resistance-and-ohms-law/voltage

Power

(Paul Carter,
R2D2 Builders Group)

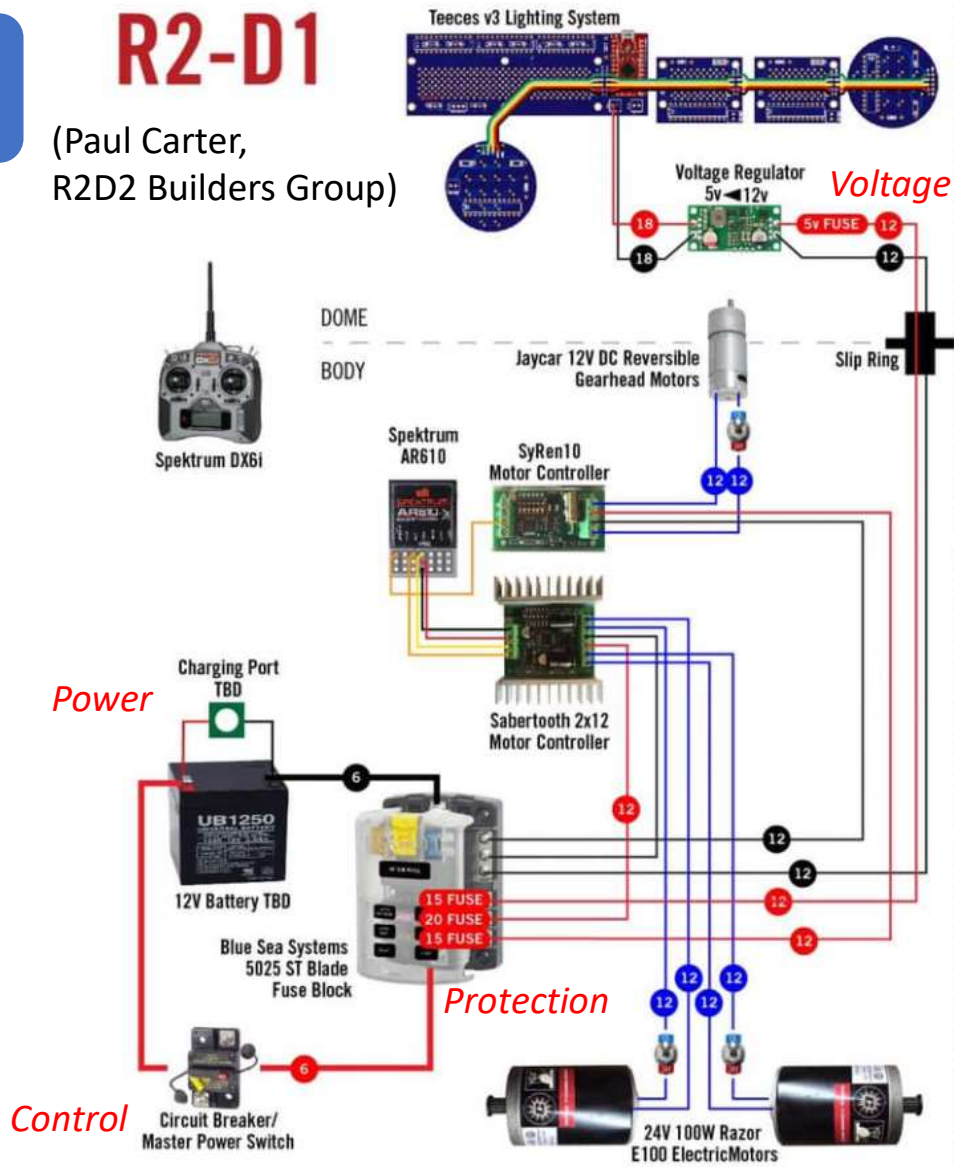

Brain

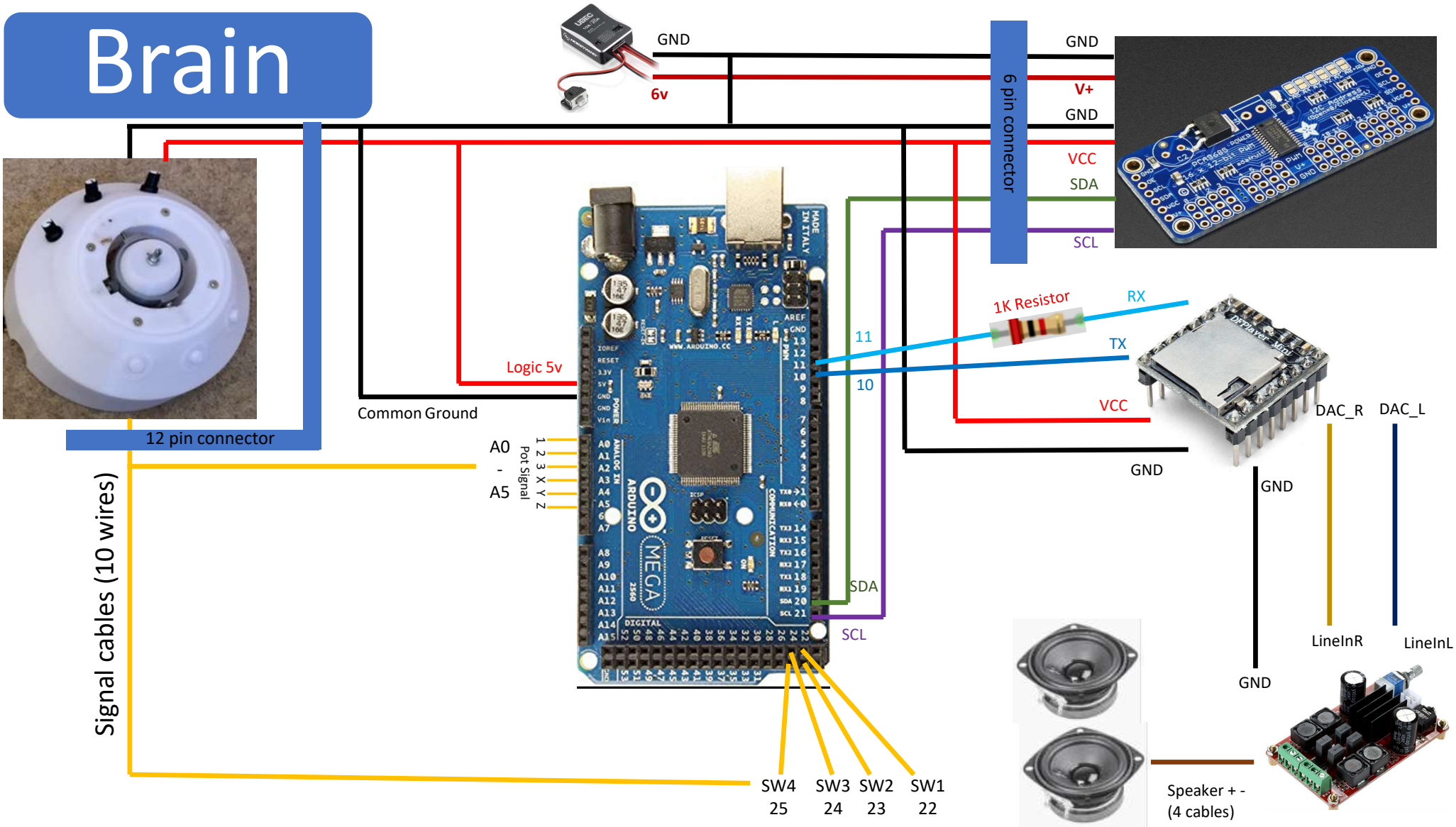
GND
6v
GND
V+
GND
VCC
SDA
SCL
6 pin connector
1K Resistor
RX
TX
VCC
GND
DAC_R
DAC_L
GND
GND
LineInR
LineInL
11
10
SDA
SCL
Logic 5v
Common Ground
12 pin connector
Signal cables (10 wires)
A0
-
A5
Pot Signal
1 2 3 X Y Z
SW4
25
SW3
24
SW2
23
SW1
22
Speaker + -
(4 cables)

Output

Wiring the LEDs and Servos to the Servo Board

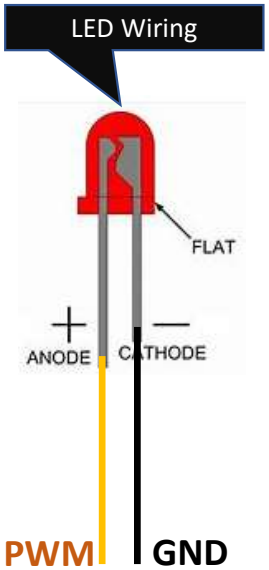

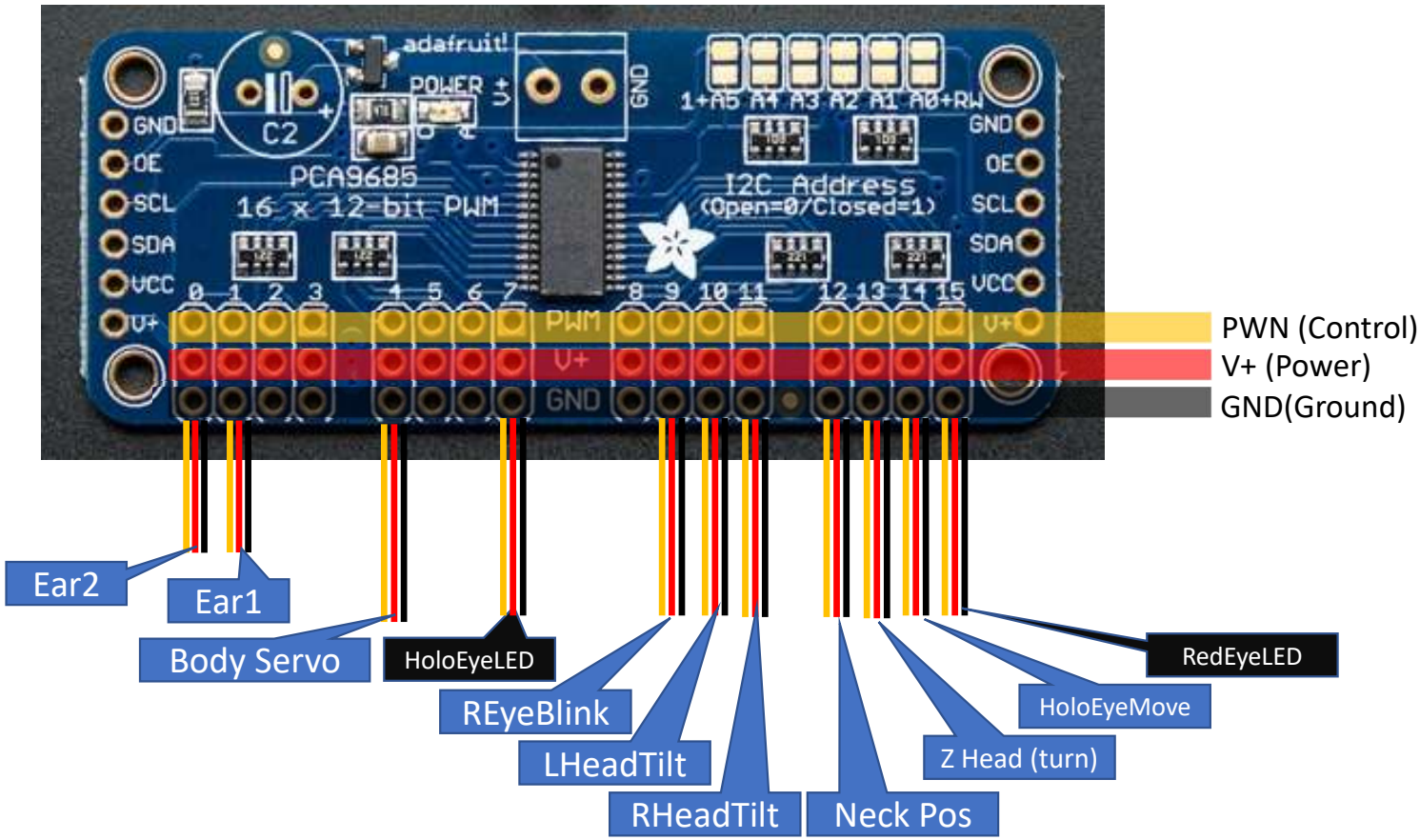

Code

V2_full_control__new_controller_ | Arduino 1.8.9 (Windows Store 1.8.21.0)

File Edit Sketch Tools Help

V2_full_control__new_controller_

```
/*


*/

#include <Wire.h>
#include <Adafruit_PWMServoDriver.h>
Adafruit_PWMServoDriver pwm = Adafruit_PWMServoDriver();

#include "Arduino.h"
#include "SoftwareSerial.h"
#include "DFRobotDFPlayerMini.h"

SoftwareSerial mySoftwareSerial(10, 11); // RX, TX
DFRobotDFPlayerMini myDFPlayer;
void printDetail(uint8_t type, int value);

unsigned long timer = 0;
```

Supported and tested by Adam, Adam Catt, Adam Egginton, Adam Howard, adam mantium, Adam Scott, Adrian Colin, afni, Aimee Demuth, Aitor Zorita, Alan Williams, Alejandro, Alexander Centeno, Alexandra Bergier, Alistair Blake, Allen Watson, Anders Sandstrom, Andre Maas , Andreas SchÃ¤fer, Andreas Selin, Andrew Baker, Andrew Finkelstein , Andrew Mayhugh, Andrew Phillips, Andrew Schwartz, Andrew Wigg, Andy Foster, Anjelica Brady, Anthony Couch, Anthony Harris, Anthony Jukes, Anthony Pizzuto, Anti-Social-Society, Arif Sethi, Armido Ferretti, Art Percy, Arthur Molina, Austin, Austin Henley, Autumn, Babak Rezai, Barry Ashcroft, Beaux Bougher, Ben Johnson, Ben Langley, Ben Lewitt, Ben RieÃŸ, Ben W Bell, Benjamin D. Smith, Bernd Pentrop, Bill Losh, BjÃ¶rn Giesler, Boyko Kazakov, Brandon Jaschke, Brandon Peden, brendan bradley, Brennan Carrizales, Brent Williams, Brent Williams, Brian, Brian Diaz, Brian Elms, Brian Grant, Bryan Clayton, Bryan Haven, Camilo Jarquin , Carey Hhh, Carl E Jones, carlos pozo, Carsten Wirtz, Cary Christie, Cerebro, Cesar Covarrubias, Chad Carrie, Chad Jackson, Charles Everette, Charles Williams, Charles Wright, Charley Letham, Chris, Chris Bozzoli, Chris Duffield, Chris Gill, Chris Herringshaw, Chris Miller, Chris Ondrovic, chris pinter, Chris Pugh, Chris Shafer, Chris Welder, Christina cato, Christina Cato, Christophe CUEFF, Christophe Kormann, Christopher C Booberg, Christopher Grey, Chsen, Chuck Arrivas, colin arber, Colin Nolan, COLT GRAHAM, Corey Allen, Corey Harris, Corey Shuman, Corey Taskis, Courtney Greene, COUTERON, Craig oakeshott, Crim Arcades, damon reed, Dan, Dan C Johnson, Dane G, Daniel, Daniel, Daniel C, Daniel Drake, Daniel Kocian, Daniel Montero, Daniel Sandberg, Danny Bijlsma, Darren McDaniel, Darren Serool, David Colby, David Dahl, David Elder - Darkmoon Creatures, David Goodfellow, David Hooie, David Hughes, David Keay, David Kinlaw, David Mohney, David Price, David Scott, dawn_kitsune, Dean, Dennis Ayotte, Dennis Bouffard, Dennis Hazelwood, Derek's Workshop, Deryck Beard, Diego Arevalo, DM Jim -- The Tabletop Engineer, Doko Theo, Doug Inman, Doug Wilson, Douglas Olson, Draco1986, Dylan Panarra, Ech03, Eduardo Alves, Elly Madrigal, Eric Ho, Eric M Gore, esther rimington, ethan hainey, Evan Muschinske, Everett Brooks, Fabian Hediger, Felix, Fernando Neves, Filippo Dispenza, Florian LEVY, Fran, Francesco Pelosi, Franziska Sauer, Gage McIvor, Gareth Becker, Gary King, Gary Smith, Geoff Pavey, Georg Schibranji, George Ford, Glynn Turner, Greg, Greg Fowler, Greg Tracy, Guillaume Jasmin, guy e, Hajuskin, Hennequez Frederic, Hiromichi Yoshida, Horst Krohn, Hugo Barois, Ian Whitehouse, Ivan Hartley, Ivan Klas, Jake Boone, Jake Danible, James, James DeMory, James Dyer, James Fender, James Hodson, james kerby, James lawick, James McHugh, James VanDusen, James Woodward, Jamie Wilson, Jason, Jason, Jason Ball, Jason Black, Jason Engebos, Jason Hawkins, Jason Loo, Jason Scott, Jay Davis, Jeff Barnes, Jeff Brockway, Jeff Johnson, Jeffrey Glass, Jens Larsson, Jeremy Langstroth, jericho63, Jerry Petrey, Jerry van Dijk, Jessica Elder, Jim, Jim Huffman, Jim McCann, Jody Reimers, Joe Kieft, Joel Griffin Dodd, Joey Amorosino, Johan Nauwelaertz de AgÃ©, John Fry, John Gowan, John Harris, John Lafferty, John Peters, John Porra, John Springer, Jon Haag, Jon Lambert, Jon Weger, Jona Smith, Jonathan Chappell, Jonathan Smith, Joroko, Jose Medina, Jose Miguel Benito Martin, Jose Rodriguez, Joseph Masci, Joseph Powell, Joseph Wright, Josh Ward, Julian Sergeant, Justin C Barren, Justin Storey, K Weese, Kai Duncan, Kelly Luck, Ken Jones, Kenneth Frydenlund, Kenny Elliott, Kevin, KEVIN A Giannecchini, Kevin Plunkett, Kevin Volo, korkai, Krakx, Kurt Knopp, LarryJ, Lars Lindberg, Laurence Bevan, Laurent Devendeville, Lee Cassar, Lee Murray, Leo Edinger, Leon de Graaff, Lloyd Tillman, Lord Hotwing, lorncampbell, Luis Rodriguez, Luke Iovenitti, Luke Killam, Luke Schumacher, M Kleis, Manuel Roman Camacho, Marc Fischer, Marc Guerin, Marco Randazzo, Marcus David Kraus, mario kempster, mark coombes, Mark Leigh, Mark Oram, Mark S Tadgell, Markus Glomb, Martin, Martin Beveridge, Martin Blanco, Martin Conway, Martin Corner, Martin Rourke, Mascelli Quentin, Mat, Mathew Doe, Matt Campbell, Matt Evans, Matt Garboski, Matt Kasdorf, Matt Keller, Matt Long, Matt Moram, Matt Pohl, Matthew Collins, Matthew Leech, Matthew Morley, Matthias, Mauro Santini, Max Burchett-Zuniga, Mel Harris, Michael, Michael, Michael Elbrecht, Michael Lennon, Michael Moser, Michael Piper, Michael Wilke, Michal Miszta, Michel Deramaix, MichelFibs, Mike Grant, Mike Hirsch, Mike Stewart, Mike Wilson, Mimir Reynisson, MIRALLES, Moody's Ozarks Traveler, Morpheus, Mr Pheer, Mr.HelpfulAsian, Nabih Saikaly, Natalie Greco, Nate Hoffman, Nathan Loding, Nathan Pratt, NAVARRO StÃ©phane, Nelson Bairos, Nic Jones, Nick, Nick Kelly, NixonFiles, Norbert Andreas Richartz, Nova C Crawford, Orpheus1103, Palmer Reale, Patrick Coyne , Patrick Ryan, Paul, Paul beer, Paul Carter, Paul Carter, Paul Godden, Paul Mandell, Paul May, Paul Smith, Paul Stre, Paul Yanzick, Pavol ProchÃ¡zka, PD Foster, Penelope Blake, Peter Peerlinck, Peter Richards, Peter Thompson, Phil Carper, Phil Hallard, Phillip Proctor, Phillip Williams, Pierre-Alain Ney, Porscifant Art, Qaz Ingham, R.n De jong, Ramey Chanadet, Raul Raygoza, Ray Edgley, Reginald Hastings II, Revilo Blok, Ricardo CatalÃ¡ GarcÃa, Richard Cuesta, Richard H McPherson, Richard Schark, Richard Wilde, Rick Ahrendt, Rick Davis, Rickey Askew, rickg_la, Rob Bathgate, Rob Dinniwell, Rob Dinniwell, Rob Fife, Rob Miller, Rob Saey, Robert Bean, Robert Brooks, ROBERT C LIBBY, Robert D White, Robert Daubar, Robert Gusek, Robert Harlan, Robert McCown, Robert Moeller, Robert Pfandler, Robert Powell, Robert Redden, Robert Sacca, Robert Simmons, Rodrigo Iloro, Romil01, Ron Mulderig, Ronald Alix, RONALD MOOREHEAD, Ronny hilton, ross hobbins, RubÃ©n, Rudolph Bescherer Jr, ryan lawrence, Ryan Moffitt, Sam Morton, Sam Neth, Sam Prentice, Santeri Jukarainen, Scot Allison, Scott Glinski, Scott Peterson, Scott Will, Sean Lavigne, Serkan Ä°Ã§ten, Seth Phillips, ShadyP, Shane Barnbrook, Shannon VanDyke, Shawn Krupianik, SHAWN LUBENETSKI, Shawn Steele, Shayne Aspaas, Sherri Leyden, Simon Freeborn, Simon Ruel, Sith Jawa, Smoulder, Steele Smith, Stephen Gradek, Stephen Hoiles, Stephen Parkes, Stephen Schmidt, Steve Haze, Steve Hull, steve niuttall, Steve Radtke, Steven Bernitz, Steven Jackson, Steven Lawrence, Steven Schultz, Steven Sloan, Stuart Winstanley, Sudzy, Svee, Tarak Sillini, Tavares Ford, Tero KÃ¤rkkÃ¤inen, Terrance mansworth, Terry Dossey, Terry Pham, The Bell-Horwaths, The First Layer, theintrospective (Dirk at FITB), Theo Deyle, Theodore Konetski, Thilo Hauke, Thomas Kokinomagulos, Thomas Ladds, Thomas Powers, Tim, Tim, Tim, Tim Bolt, Tim Girard, Tim Goldenburg, Tim Largent, Tim Willson, Timothy Baginski, Timothy Campbell, Timothy Greer, Timothy Hebel, Tinker77, TK3062, Toby Sabol, Todd Roesner, Tom Stenbraaten, Tomasz Cholewinski, tony antonelli, tony ferguson, Tori Holmes-Kirk, Travis Carney, Travis Crusenberry, Trevor Zaharichuk, Tricky Troy, Troll and Error, Troy Rogers, Troy Thorne, TubbyTusken, Ty Pepin, Tyler, Val Glessner, vincent monchy, Waldo Minny, Walter Codesido, Walter Martinez, Warren, Wayne Allen, Wayne Kennedy , Wayne Vyner, Wayward Perspective, William, William, William Bowles, William J Steele, William Traynham, YCSWYD, ZED Defense, Zman, , Thank you!!!!